Hydronit

AC & DC Hydraulic Power Packs Compact

Power Packs Compact series

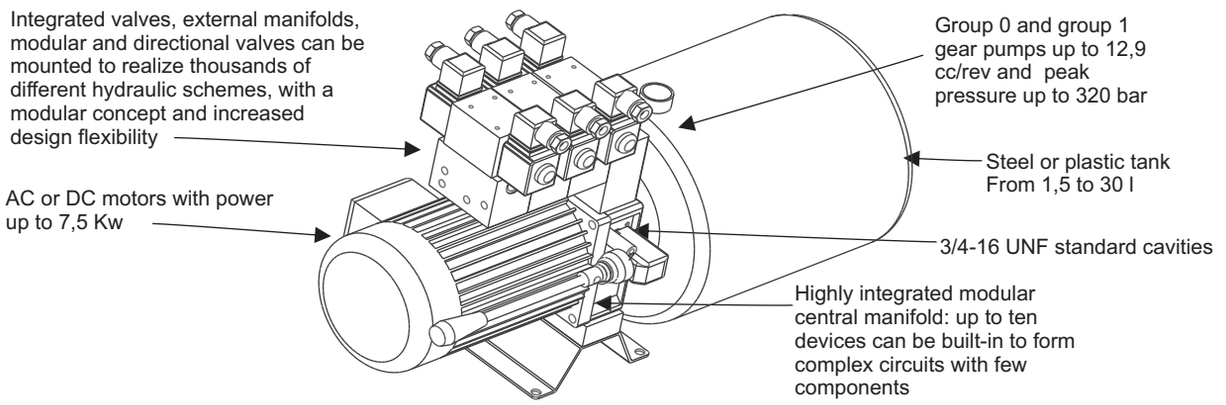

The central manifold is the core part of our mini power packs system.
Its advanced design offers four main advantages:
high integration, modularity, performance and market compatibility

HIGH INTEGRATION AND SYSTEM MODULARITY

- Modular system of sub-parts assembled to easily realize thousands of different configurations at the same time offering to distributors the possibility to optimize their stock thanks to the reduced number of parts.
- A single Universal central manifold with multiple executions available to realize either the simpliest or the most complex hydraulic power unit, DC or AC, for single or double effect circuits, with plastic or steel tanks, for industrial or mobile applications with power up to 7,5kW, flow up to 25l/min and pressure up to 320bar. Up to ten devices can be integrated into the central manifold for maximum design flexibility and circuit compactness.
- All components are single-piece pre-assembled and pre-tested cartridges: no springs, washers, poppets messing up when finally assembling the complete power pack.
- Possibility to mount integral AC and DC motor directly on the central manifold without additional flanges and couplings. With one single coupling you can mount all available integral AC motors. B14 mounting kits are available, too.
- Compact and lightweight aluminium die-casting technology (central manifold with only 1,1 kg weight).

PERFORMANCES

- The gear pumps are manufactured with pressure balanced compensation plates. This technology reduces the mechanical clearings at the pressure increase, thus greatly improving the hydraulic efficiency, reducing heat generation and consumption.
- The integral motors are designed and their electric performance optimized for typical mini power pack applications (high starting torque, high power density).
- The central aluminium manifold, 100% tested, guarantees leakage-free operation during the life span of the product.
- The functional components are made with hardened steel parts for best reliability and long life.

MARKET COMPATIBILITY

- Our sales policy includes the possibility to supply power packs in kit of loose parts, in order to offer assembling flexibility to local distributors and simplify worldwide spare parts procurement and post-sale service.
- Tanks with Ø123 mm flange with two different bolts attachments can be fitted.
- Gear pumps group 0 and group 1 with tang drive shaft, clockwise or anticlockwise rotation, bidirectional or double execution (also Hi-Lo) can be mounted. Standard pumps have clockwise rotation.
- Standard B14 electric motors, clockwise or anticlockwise rotation can be mounted.
- Screw-in cartridge valves are fitted in ¾-16UNF-2B standard cavities.
- The main relief valve is fitted in a M20x1,5 standard cavity.
- Compensated flow regulators on return lines are fitted in standard 1/4" BSPP cavities.

All information included in this catalogue are indicative and susceptible of change without notice

Index

Tables coding:	U040	.	10	.	03	.	00
	Catalogue		Section		Table n°		Revision n°

Section U040.00: Code selection and quick selection guide

Section U040.10: Universal central manifolds

- U040.10.01: Universal central manifold "UA" execution valve combinations
- U040.10.02: Universal central manifold "U4" execution valve combinations
- U040.10.03: Universal central manifold "UB" and"UR" execution valve combinations
- U040.10.04: Universal central manifolds overall dimensions

Section U040.20: Integral components and pumps

- U040.20.01: VMDC35 direct acting main relief valve
- U040.20.02: VMDC20 direct acting relief valve
- U040.20.03: VCF6 pressure compensated flow control valve
- U040.20.04: CSB bidirectional flow control valve
- U040.20.05: VSC01 pressure compensated fixed flow control valve
- U040.20.06: VSC04 pressure compensated fixed flow control valve
- U040.20.07: VUC20 basic check valve
- U040.20.08: CPE manual emergency valve
- U040.20.09: CM manual lever valve
- U040.20.10: PMC cartridge hand pump
- U040.20.11: MSV pilot operated two-way single locking solenoid valve
- U040.20.12: MDV direct operatd two-way double blocking solenoid valve
- U040.20.13: MSV4V direct operated 4/3 or 4/2 way directional spool solenoid valve
- U040.20.14: VMPC2 proportional relief valve
- U040.20.15: CSPC15 proportional flow control valve
- U040.20.16: VPC electronic amplifier for proportional solenoid valves
- U040.20.17: Plugs
- U040.20.18: G type gear pumps
- U040.20.19: K type gear pumps
- U040.20.20: H type high pressure gear pumps
- U040.20.21: Bidirectional gear pumps
- U040.20.22: Double gear pumps
- U040.20.23: Helical rotor pumps for high pressure, high flow and low noise applications

Section U40.30: Additional manifolds and components

- U040.30.01: Cetop 3 modular manifolds
- U040.30.02: Cetop 3 modular manifolds with integral pilot operated check valves
- U040.30.03: Cetop 3 sandwich relief valves
- U040.30.04: Cetop 3 sandwich flow control valves
- U040.30.05: Cetop 3 directional solenoid valves
- U040.30.06: Cetop 3 directional manual valves
- U040.30.07: Stackable directional solenoid valves
- U040.30.08: PM09 hand pump modular manifold
- U040.30.09: Modular manifold with check valves
- U040.30.10: Other modular manifolds
- U040.30.11: Manifolds for 3/4-16 UNF cartridges
- U040.30.12: MSV3V direct operated 3/2 way directional spool solenoid valve
- U040.30.13: Return line filter modular manifold
- U030.30.14: Accessories

Section U40.40: AC/DC electric motors

- U040.40.01: Integral DC motors ø 80
- U040.40.02: Integral DC motors ø 112
- U040.40.03: Fan cooled integral DC motors ø 125
- U040.40.04: Heavy duty DC motors ø 151 with fan cooling
- U040.40.05: DC motors choice and electric connection schemes
- U040.40.06: DC motors diagrams
- U040.40.07: Integral AC motors
- U040.40.08: B14 AC motors
- U040.40.09: Mounting kit for frame 71 B14 motors
- U040.40.10: Mounting kit for frame 80 B14 motors
- U040.40.11: Mounting kit for frame 90 B14 motors
- U040.40.12: Mounting kit for frame 100/112 B14 motors

Section U40.50: Tanks and accessories

- U040.50.01: Round steel tanks A & B series
- U040.50.02: Horizontal/Vertical square welded steel tanks C series
- U040.50.03: Small size square welded steel tanks E series
- U040.50.04: Square welded steel tanks E series
- U040.50.05: Square plastic tanks L,M & N series
- U040.50.06: Tanks plugs and accessories
- U040.50.07: Accessories

All information contained in this catalogue are indicative and subject to change without prior notice

www.hydronit.com
E-mail: sales@hydronit.com
Fax +39 03621841214

POWER PACKS COMPACT series ordering code

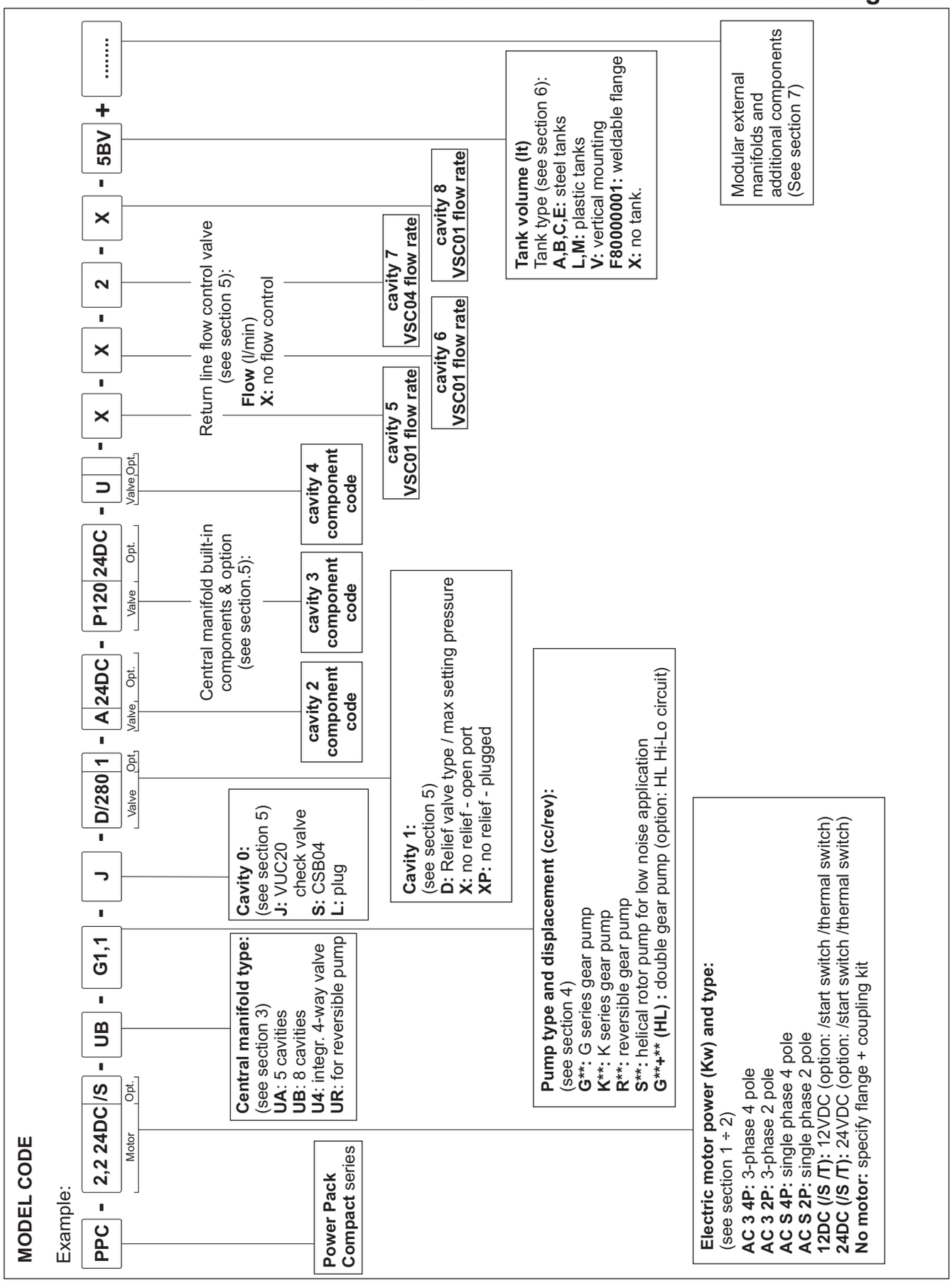

www.hydronit.com
E-mail: sales@hydronit.com
Fax +39 03621841214

QUICK SELECTION GUIDE

1: AC motors

1.1: B14 AC motors (See table U040.40.08)

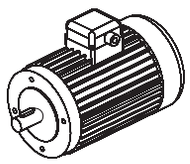

B14 AC motor frame size	Typical power range [kW]	Spare flange code	Spare coupling code	Mounting kit code (to be indicated in PPC code)
71	0,25 ÷ 0,37	F27010001	E36100001 + E36100006 E36100001 + E36100000	XB1471 -0 (gr.0 pumps) XB1471 -1 (gr.1 pumps)
80	0,55 ÷ 0,75	F27010002	E36100002 + E36100006 E36100002 + E36100000	XB1480 -0 (gr.0 pumps) XB1480 -1 (gr.1 pumps)
90	1,1 ÷ 1,5	F27010003	E36100003 + E36100000	XB1490 (only gr.1 pumps)
100/112	2,2 ÷ 7,5	F27010004	E36100004 + E36100000	XB14100 (only gr.1 pumps)

PPC for B14 motors are normally supplied with mounting kit only. The motor is at customer care.

1.2: AC integral motors three-phase (See tables U040.40.07)

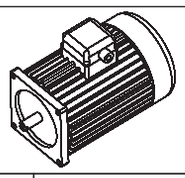

Integral AC motor frame size	Maximum Power (S3 40%)		Rated Power (S1 continuous duty)		Spare motor code	Spare coupling code (only for spare parts orders)
	kW	HP	kW	HP		
Three-phase 4 poles (~1450 rpm at 50Hz)						
71	-	-	0,25	0,35	E025AC341	E36100006 (gr.0 pumps) E36100000 (gr.1 pumps)
	-	-	0,37	0,5	E037AC341	
	-	-	0,55	0,75	E055AC341	
	0,75	1	-	-	E075AC341S3	
80	0,75	1	0,55	0,75	E075AC342S3	
	1,1	1,5	0,75	1	E110AC342S3	
90	1,5	2	1,1	1,5	E150AC343S3	
	2,2	3	1,5	2	E220AC343S3	
	3	4	2,2	3	E300AC343S3	
Three-phase 2 poles (~2900 rpm at 50Hz)						
71	-	-	0,37	0,5	E037AC321	E36100006 (gr.0 pumps) E36100000 (gr.1 pumps)
	-	-	0,55	0,75	E055AC321	
80	1,1	1,5	0,75	1	E110AC322S3	
	1,5	2	1,1	1,5	E150AC322S3	
	2,2	3	1,5	2	E220AC322S3	
90	3	4	2,2	3	E300AC323S3	
	4	5,4	3	4	E400AC323S3	

Other power / frame sizes and special motor types are available on request. Motors with codes ending with ”S3” are for intermittent duty, S3 40% duty cycle means up to 6 switching on and off in an hour, i.e. the motors is ON for 4 min. and OFF for 6 min. These motors can be applied to a continuous duty (S1) at a reduced power. See above table.
Ask to our technical office: we will offer optimised solutions for either intermittent or heavy duty applications.
In PPC code ordering code just specify the motor power and type and the pump type; the relevant coupling is provided as standard.
When ordering spare motors the coupling is not included and must be ordered separately.

Hydronit
www.hydronit.com
E-mail: sales@hydronit.com
Fax +39 03621841214

1.3: AC integral motors single-phase (See tables U040.40.07)

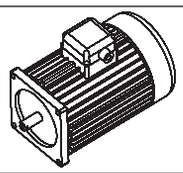

Integral AC motor frame size	Maximum Power (S3 40%)		Rated Power (S1 continuous duty)		Spare motor code	Spare coupling code (only for spare parts orders)
	kW	HP	kW	HP		
Single-phase 4 poles (~1450 rpm at 50Hz)						
71	-	-	0,25	0,35	E025ACS41	E36100006 (gr.0 pumps) E36100000 (gr.1 pumps)
	-	-	0,37	0,5	E037ACS41	
80	0,55	0,75	0,37	0,55	E055ACS42S3*	
	0,75	1	0,55	0,75	E075ACS42S3*	
90	1,1	1,5	-	-	E110ACS43S3*	
	1,5	2	1,1	1,5	E150ACS43S3*	
	2,2	3	1,5	2	E220ACS43S3*	
Single-phase 2 poles (~2900 rpm at 50Hz)						
71	-	-	0,37	0,5	E037ACS21	E36100006 (gr.0 pumps) E36100000 (gr.1 pumps)
	-	-	0,55	0,75	E055ACS21	
80	0,75	1	0,55	0,75	E075ACS22S3	
	1,1	1,5	0,75	1	E110ACS22S3	
	1,5	2	1,1	1,5	E150ACS22S3	
90	1,5	2	-	-	E150ACS23S3	
	2,2	3	1,5	2	E220ACS23S3	

Other power / frame sizes and special motor types are available on request. Ask to our technical office: we will offer optimised solutions for either intermittent or heavy duty applications.
Motors with codes ending with ”S3” are for intermittent duty. S3 40% duty cycle means up to 6 switching on and off in an hour with the motor ON for 4 min. and OFF for 6 min.
*: these motors are available in “HT” high starting torque version too. See table U040.40.07.
In PPC code ordering code just specify the motor power and type and the pump type; the relevant coupling is provided as standard.
When ordering spare motors the coupling is not included and must be ordered separately.

2: DC motors (See tables U040.40.01 ÷ U040.40.06)

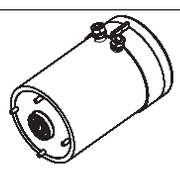

DC motor frame size	Power kW	Voltage V DC	PPC Assembly code	PPC assembly code (with thermal protection)	Spare motor code	Spare motor code (with thermal protection)	Spare mounting kit code (only for spare parts orders)
Ø80	0,5	12	0,5 12DC	0,5 12DC/T	M46C1S005	M46C1ST05	E36200006 (gr.0 pumps) E36200002 (gr.1 pumps)
	0,5	24	0,5 24DC	0,5 24DC/T	M46C2S005	M46C1ST05	
	0,8	12	0,8 12DC	0,8 12DC/T	M46C1S008	M46C1ST08	
	0,8	24	0,8 24DC	0,8 24DC/T	M46C2S008	M46C2ST08	
Ø112	1,6	12	1,6 12DC	1,6 12DC/T	M46C1S016	M46C1ST16	E36200001 (only for gr.1 pumps)
	2,1	12	-	2,1 12DC/T	-	M46C1ST21	
	2,2	24	2,2 24DC	2,2 24DC/T	M46C2S022	M46C2ST22	
Ø125	2,4	12	-	2,4 12DC/T	-	M46C1ST24	E36200001 (only for gr.1 pumps)
	3,0	24	-	3 24DC/T	-	M46C2ST30	
Ø151	2,5	12	-	2,5HD 12DC/T	-	MB14C1ST25	XB1490
	3,0	24	-	3HD 24DC/T	-	MB14C2ST30	
	4,0	24	-	4HD 24DC/T	-	MB14C2ST40	

www.hydronit.com
E-mail: sales@hydronit.com
Fax +39 03621841214

2.1: DC motor options

PPC code	Description	Spare part code	Mounting advise
/S150 12DC 80 **/S150 24DC 80**	Starting switch 150A 12 or 24V DC	**M47SC0001+M47SK0801** **M47SC0002+M47SK0801**	For ø80 motors
/S150 12DC 112 **/S150 24DC 112**	Starting switch 150A 12 or 24V DC	**M47SC0001+M47SK1121** **M47SC0002+M47SK1121**	For ø112 motors
/S200 12DC **/S200 24DC**	Starting switch 200A 12 or 24V DC	**M47ZC0001** **M47ZC0002**	For ø125 and ø151 motors
P0201	Remote wired control with two buttons and 3m cable	**P0201**	For single acting cylinders
P0202	Remote wired control with two buttons and 3m cable	**P0202**	For double acting cylinders
F16000001	DC motors plastic cover	**F16000001**	For ø112 motors

3: Universal Central manifold (See section U040.10)

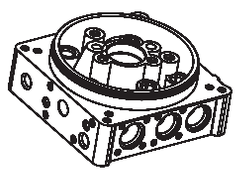

UA execution E60104020

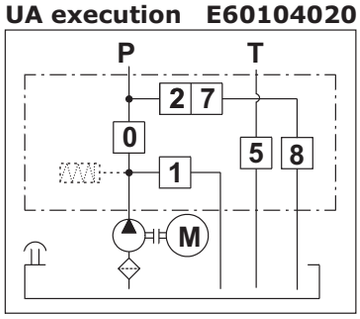

Typical applications:
- single acting circuits;
- double acting circuits (with cetop3 valves, bancable solenoid valve);
- HI-LO pumps.

UB execution E60104021

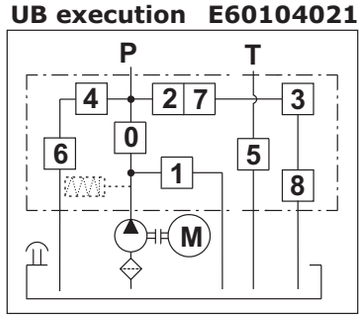

Typical applications:
- as UA type plus:
- integral emergency hand pump, adjustable flow control valve on return line and/or complex controls.

U4 execution E60104022

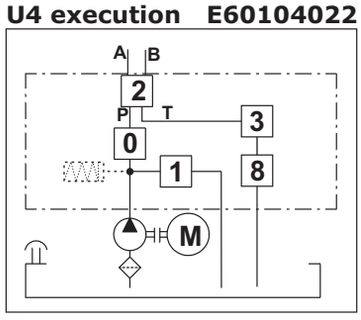

Typical application:
- double acting circuit with integrated 4-way solenoid cartridge valve

UR execution E60104023

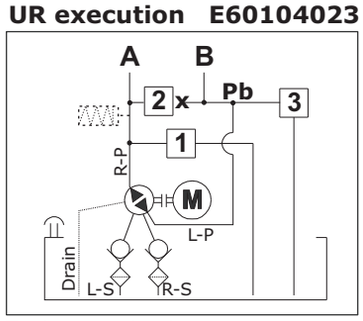

Typical application:
- double acting cylinder with reversible pump to the use avoid directional valve.

Central manifold codes do not include valves and other components.

Hydronit
www.hydronit.com
E-mail: sales@hydronit.com
Fax +39 03621841214

4: Pumps (See tables U040.20.18 ÷ U040.20.23)

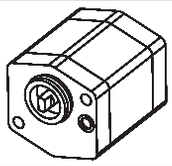

G type gear pumps

PPC code	Displacement (cc/rev)	Spare part code
G0,2	0,26	**E60503002**
G0,4	0,38	**E60503004**
G0,6	0,63	**E60503006**
G0,8	0,85	**E60603001**
G1,1	1,1	**E60603002**
G1,3	1,3	**E60603003**
G1,6	1,6	**E60603035**
G2,1	2,1	**E60603004**
G2,6	2,6	**E60603005**
G3,2	3,2	**E60603006**
G3,7	3,7	**E60603007**
G4,2	4,2	**E60603008**
G4,9	4,8	**E60603009**
G6,0	5,8	**E60603010**
G7,9	8	**E60603012**
G9,8	9,78	**E60603014**

K type gear pumps

PPC code	Displacement (cc/rev)	Spare part code
K0,2	0,26	**E60504002**
K0,4	0,38	**E60504004**
K0,6	0,63	**E60504006**
K0,9	0,89	**E60604001**
K1,2	1,27	**E60604002**
-	-	**-**
K1,6	1,66	**E60604035**
K2,1	2,17	**E60604004**
K2,7	2,8	**E60604005**
K3,2	3,32	**E60604006**
K3,7	3,8	**E60604007**
K4,2	4,3	**E60604008**
K5,0	5,1	**E60604009**
K6,0	6,0	**E60604010**
K7,9	7,9	**E60604012**

H type high pressure gear pumps

PPC code	Displacement (cc/rev)	Spare part code
H1,2	1,2	**E60605002**
H1,7	1,7	**E60605035**
H2,2	2,2	**E60605004**
H2,6	2,6	**E60605005**
H3,2	3,2	**E60605006**
H3,8	3,8	**E60605007**
H4,2	4,3	**E60605008**
H4,7	4,7	**E60605009**
H6,0	6,0	**E60605010**

Bidirectional gear pumps

PPC code	Displacement (cc/rev)	Spare part code
R0,2	0,26	**E60504502**
R0,4	0,38	**E60504504**
R0,6	0,63	**E60504506**
R0,9	0,88	**E60504509**
R1,3	1,25	**E60504513**
R1,5	1,50	**E60504515**

Higher displacements avaiable on request.

See functional characteristics on tables U040.20.18 ÷ U040.20.22
The actual pump displacements can change ± 5% of nominal values.

Helical rotor pumps for high pressure and low noise and low pulsation applications.
Typical noise level around 50 to 55 dbA.

PPC code	Displacement (cc/rev)	Spare part code
S6,4	6,4	**S60603010**
S8,3	8,3	**S60603012**
S10	10,2	**S60603014**
S13	12,9	**S60603016**

See functional characteristics on table U040.20.23

Double gear pumps with Hi-Lo system

PPC code	Displacement (cc/rev)	Spare part code
K0,9+3,2HL	0,9+3,2	**E60600932HL**
K2,1+6,0HL	2,1+6,0	**E60602160HL**

Other displacement avaiable on request.

www.hydronit.com
E-mail: sales@hydronit.com
Fax +39 03621841214

5: Integral components (See section U040.20)

5.1: Built-in valve for cavity 0:

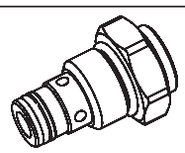

VUC20 is the basic check valve and it's normally mounted in cavity 0. Other valves can be fitted, like an in-line flow control CSB04C. If the check valve is not required choose L plug.

PPC code	Description	Max flow (l/min)	Max pressure (bar)	Hydraulic symbol	Spare valve code
J	3/4-16 UNF check valve	25	350		**VUC20**
S	3/4-16 UNF adjustable not compensated bi-directional flow control	15	300		**CSB04C**
L	Plug L	-	-		**E70100004**

5.2: Relief valves code / setting for cavity 1:

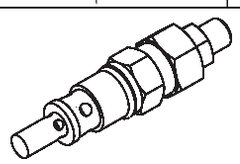

Relief valves are of direct acting type and normally supplied with screw adjustment. Hand wheel and sealing devices are available on request, too.

PPC code	Description	Max flow (l/min)	Working range (bar)	Spare valve code
D/60	Direct acting relief valve with balanced poppet	35	5 ÷ 60	**VMDC35L1**
D/180	Direct acting relief valve with balanced poppet	35	10 ÷ 180	**VMDC35A1**
D/280	Direct acting relief valve with balanced poppet	35	35 ÷ 280	**VMDC35B1**
X	No relief valve, open port	-	-	**-**
XP	No relief valve, plug	-	-	**E70100010**

5.3: Built-in plugs for cavities 2 / 3 / 4:

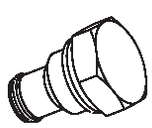

PPC code	Description	Max flow (l/min)	Max pressure (bar)	Hydraulic symbol	Mounting cavity	Spare plug code
G	Plug G	-	-		2 - 3 - 4	**E70100005**
H	Plug H: 1/4'' BSPP outlet port	-	-		2 - 3 - 4	**E70100003**
L	Plug L	-	-		0 - 2 - 3 - 4	**E70100004**
P	Plug P	-	-		0 - 2 - 3 - 4	**E70100006**
N	Plug N	-	-		0 - 2 - 3 - 4	**E70100002**

www.hydronit.com
E-mail: sales@hydronit.com
Fax +39 03621841214

5.3: Built-in valves for cavities 2 / 3 / 4:

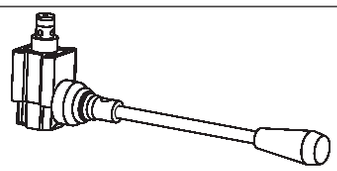

PPC code	Description	Max flow (l/min)	Max pressure (bar)	Hydraulic symbol	Mounting cavity
E	CM04L: lever operated valve	25	300	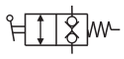	2 - 4
EM	CM04M: lever operated valve with micro-switch	25	300	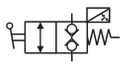	2 - 4
J	VUC20: 3/4-16 UNF check valve	25	350		0 - 2 - 3 - 4
R*	VCF6: 3/4-16 UNF adjustable pressure compensated uni-directional flow control	1÷18,5	350		3
S	CSB04C: 3/4-16 UNF adjustable not compensated bi-directional flow control	15	300		2 - 3 -4
U	PMC02L: 3/4-16 UNF 2cc/stroke single acting hand pump	-	200		2 - 4
V***	VMDC20/***: 3/4-16 UNF relief valve (where *** is the max settable pressure)	20	350		3
Z	CPE04P: 2 way / 2 position hand operated NC double locking valve	25	300	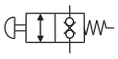	0 - 2 - 3 - 4

5.4: Built-in solenoid and proportional valves /voltage for cavities 2 / 3 / 4:

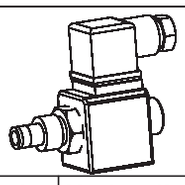

PPC code	Description	Flow (l/min)	Pressure (bar)	Standard coils and voltages	Hydraulic symbol	Mounting cavity
A	MSV30: 2 way / 2 position solenoid normally closed valve	20	210	12, 24 DC 115/50, 230/50AC	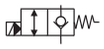	2 - 4
B	MSV30E: 2 way / 2 position solenoid normally closed valve with emergency	20	210	12, 24 DC 115/50 AC, 230/50 AC	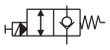	2 - 4
C	MSV31E: 2 way / 2 position solenoid normally open valve with emergency	20	210	12, 24 DC 115/50 AC, 230/50 AC	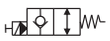	2 - 4
D	MDV30E: 2 way / 2 position solenoid normally closed double locking valve	20	210	12, 24 DC 115/50 AC, 230/50 AC	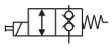	2 - 3 - 4
P***	VMPC2: direct acting proportional relief valve	2	350	12, 24DC		3
T***	CSPC15: proportional flow control valve	15	210	12, 24DC	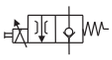	2 - 4
4V**	MSV4V: direct operated 4/3 or 4/2 directional spool solenoid valve	20	210	12, 24 DC 115/50 AC, 230/50 AC	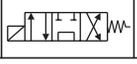	2

www.hydronit.com
E-mail: sales@hydronit.com
Fax +39 03621841214

5.5: Return line pressure compensated fixed flow control valves for cavities 5 / 6 / 7 / 8:

Please specify for each cavity the required nominal flow control adjustment: (l/min).
Effective flow can be different depending on working conditions. See tables U040.20.05 and U040.20.06.

PPC code	Description	Spare valve code	Max flow (l/min)/ pressure (bar)	Mounting cavity
0 / 1 / 2 / 3 / 4 / 5 / 6 / 8 / 10 / 12 / 15	BSPP 1/4"	**VSC01***	15 / 250	5 - 6 - 8
0 / 1 / 2 / 3 / 4 / 5 / 6 / 8 / 10 / 12 / 15	Ø12,7 with o-ring	**VSC04****	15 / 250	7
X	No flow control	**-**	-	-

6: Oil tanks (See section U040.50)

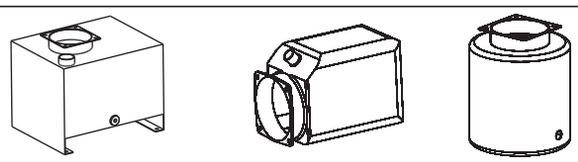

Choose tank volume, type and mounting style.

PPC code	Description	Spare tank code, inclusive of plugs and filler/breather
Steel tanks		
1,5A / 1,5AV	1,5l, cylindrical, horizontal / vertical mounting	**E60303001**
2,5A / 2,5AV	2,5l, cylindrical, horizontal / vertical mounting	**E60303004**
5B / 5BV	5l, cylindrical, horizontal / vertical mounting	**E60303006**
10B / 10BV	10l, cylindrical, horizontal / vertical mounting	**E60303011**
12B / 12BV	12l, cylindrical, horizontal / vertical mounting	**E60303012**
10C / 10CV	10l, square, horizontal / vertical mounting	**E60303042**
22C / 22CV	22l, square, horizontal / vertical mounting	**E60303044**
8EV	8l, square, vertical mounting	**E60303041**
15EV	15l, square, vertical mounting	**E60303014**
20EV	20l, square, vertical mounting	**E60303015**
30EV	30l, square, vertical mounting	**E60303048**
Plastic tanks		
1,5L / 1,5LV	1,5l, square 170x140, horizontal / vertical mounting	**H60303016**
3L / 3LV	3l, square 170x140, horizontal / vertical mounting	**H60303018**
6L / 6LV	6l, square 170x140, horizontal / vertical mounting	**H60303020**
5M / 5MV	5l, square 170x170, horizontal / vertical mounting	**H60303025**
8M / 8MV	8l, square 170x170, horizontal / vertical mounting	**H60303033**
6N / 6NV	6l, square 180x180, horizontal / vertical mounting	**H60303026**
12N / 12NV	12l, square 180x180, horizontal / vertical mounting	**H60303036**

Filler / breather port and drain plug, graduated oil level (20EV, 30EV square steel tanks only), standard suction filter, inlet pipe, outlet pipe, stainless steel clamp, depending on code, are included in the standard assembly when ordering assembled PPC. When ordering spare tanks, only basic plugs and filler / breather and graduated oil level (20EV, 30EV tanks only) are included; fixing kits, piping and filters are to be ordered separately. When choosing units without tank, specify **X** in PPC code. In this case the inlet - outlet piping kit and filter are not supplied. A steel tank adapter to be welded on custom made reservoires can be supplied; in this case specify code **F80000001** in place of tank code.

www.hydronit.com
E-mail: sales@hydronit.com
Fax +39 03621841214

7: External manifolds and additional components

Many options and additional components are available to customise PPC units for any application.
They must be added at the end of PPC code. The three different manifold fixing systems (2xM8, 3xM6, 4xM6) cannot be mixed among them.

7.1: Modular external manifolds (See section U040.30)
2 x M8 tie-rods fixing system

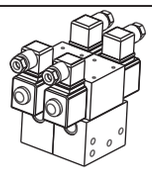

PPC & spare parts code	Description	See technical table
E60403004	28mm spacer sub-plate	U040.30.10
E60403005	90° rotation manifold	
E60403001	Cetop3 parallel manifold with rear ports	U040.30.01
E60403010	Cetop3 parallel manifold with lateral ports	
E60403011	Cetop3 serial manifold with lateral ports	
E60413001	Cetop3 manifold with piloted check valve on A and B port	U040.30.02
E60413002	Cetop3 manifold with piloted check valve on A port	
E60413003	Cetop3 manifold with piloted check valve on B port	
HD03****	Cetop3 directional manual valves	U040.30.06
SD03****	Cetop3 directional solenoid valves	U040.30.05
E60433001	Cetop3 sandwich flow control valve on A and B port	U040.30.04
E60433002	Cetop3 sandwich flow control valve on A port	
E60433003	Cetop3 sandwich flow control valve on B port	
E60423001	Cetop3 sandwich relief valve on A and B port	U040.30.03
E60423002	Cetop3 sandwich relief valve on A port	
E60423003	Cetop3 sandwich relief valve on B port	
E60403020	Modular manifold with return filter on T line	U040.30.13
E60403027	Modular manifold with pilot check valves	U040.30.09
E60403028	Modular manifold with check valve A -> T piloting	
PM09	Hand pump modular manifold	U040.30.08

7.2: Stackable external directional control valves (See section U040.30)
3 x M6 tie-rods fixing system

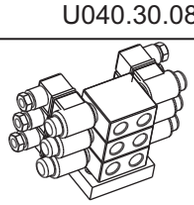

PPC & spare parts code	Description	See technical table
E60403006	Mounting manifold for stackable directional directional valves	U040.30.07
SD01****	Stackable directional solenoid valves	

www.hydronit.com
E-mail: sales@hydronit.com
Fax +39 03621841214

7.3: Modular external manifolds (See section U040.30)
4 x M6 tie-rods fixing system

PPC & spare parts code	Description	See technical table
E60403031	Modular manifolds for 3/4-16 UNF three way cartridges	U040.30.11
E60403030	Modular manifolds for 3/4-16 UNF two way cartridges	
MSV3V	Direct operated 3/2 way directional spool solenoid valve	U040.30.12

7.4: Additional components and accessories (See section U040.30)

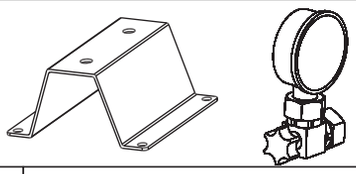

PPC & spare parts code	Description	See technical table
E60543006	Steel foot mounting support	U040.30.14
E60543007	Tall steel foot mounting support	
EM9001C	90° gauge isolator F-F	U040.30.14
EMIL01C	In line gauge isolator F-F	
MIR63* **	Pressure gauge Ø 63	
F401* **	Pressure switch 1/4”BSPP	
BFCSAE0802	In line mounting 3/4-16 UNF manifold 3/8”BSPP	
BFCSAE0801	In line mounting 3/4-16 UNF manifold 1/4”BSPP	
MIR40* **	Pressure gauge Ø 40	U040.30.13
C43200001	Return filter	U040.50.07
SUV	Start up valve for single phase motors	U040.40.07a

COMMISSIONING BRIEF INFORMATION

Installation position	Any
Ambient temperature	-15 ÷ +50°C
Hydraulic fluid	Hydraulic oil ISO 6743/4 / DIN 51519, viscosity 15 ÷ 100 mm^2/s ISO 3448 (recommended viscosity 22÷46 mm^2/s)
Fluid temperature	-10° ÷ +70°C unless otherwise stated
Contamination degree	Must be higher than class 18/14 ISO 4406
Instructions	- After having connected the electric motor and the hydraulic piping, check the pump rotation with short bursts of 1÷2 sec. For standard pumps motor rotation must be clockwise looking from motor fan side. Never reverse rotation. - Bleed the hydraulic installation and flush the circuit in order to remove eventual impurities - Check the hydraulic fluid level and, if necessary, fill-up to maximum. - To ensure proper working and long life, check the hydraulic fluid and replace it after first 100h and then every 3000h operation and/or at least every year.
Threads recommended tightening torque	M5: 4÷5,5 Nm, M6: 8÷10 Nm, M8: 16÷20 Nm, M8 pump: 21÷25 Nm, M10: 30÷40 Nm, 1/4” BSPP: 6÷20 Nm, 3/4-16 UNF valves: 15÷40 Nm, M20x1,5 relief valve: 50 Nm, ½”BSPP plugs for tanks: 10Nm.

Section 10

UNIVERSAL CENTRAL MANIFOLD

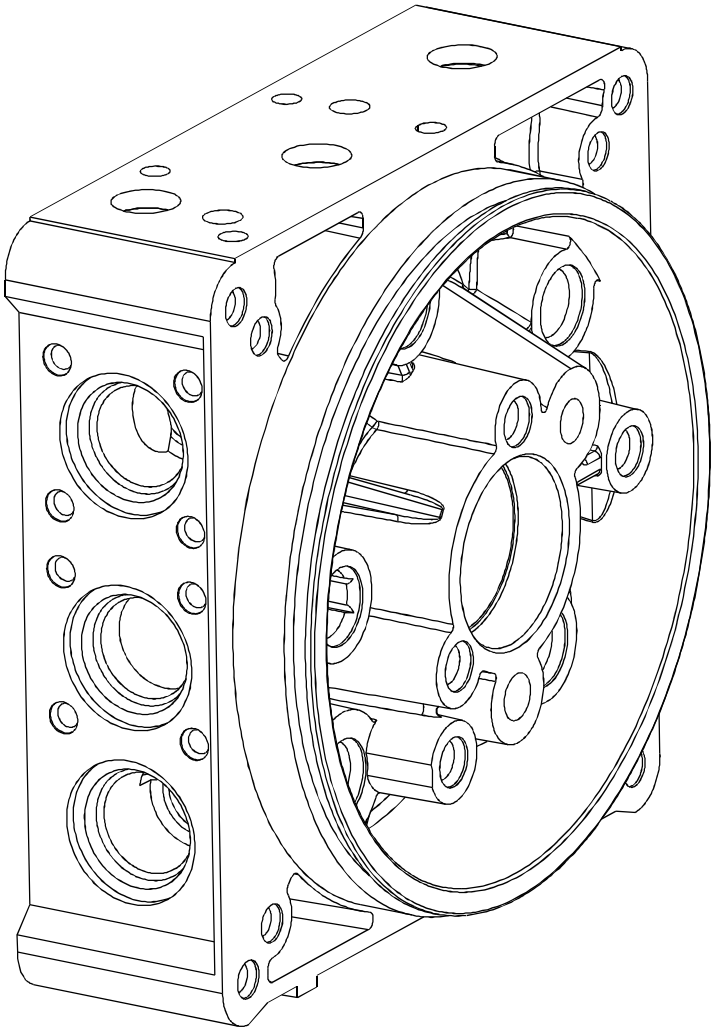

www.hydronit.com
E-mail: sales@hydronit.com
Fax +39 03621841214

Universal central manifold “UA” execution valve combinations

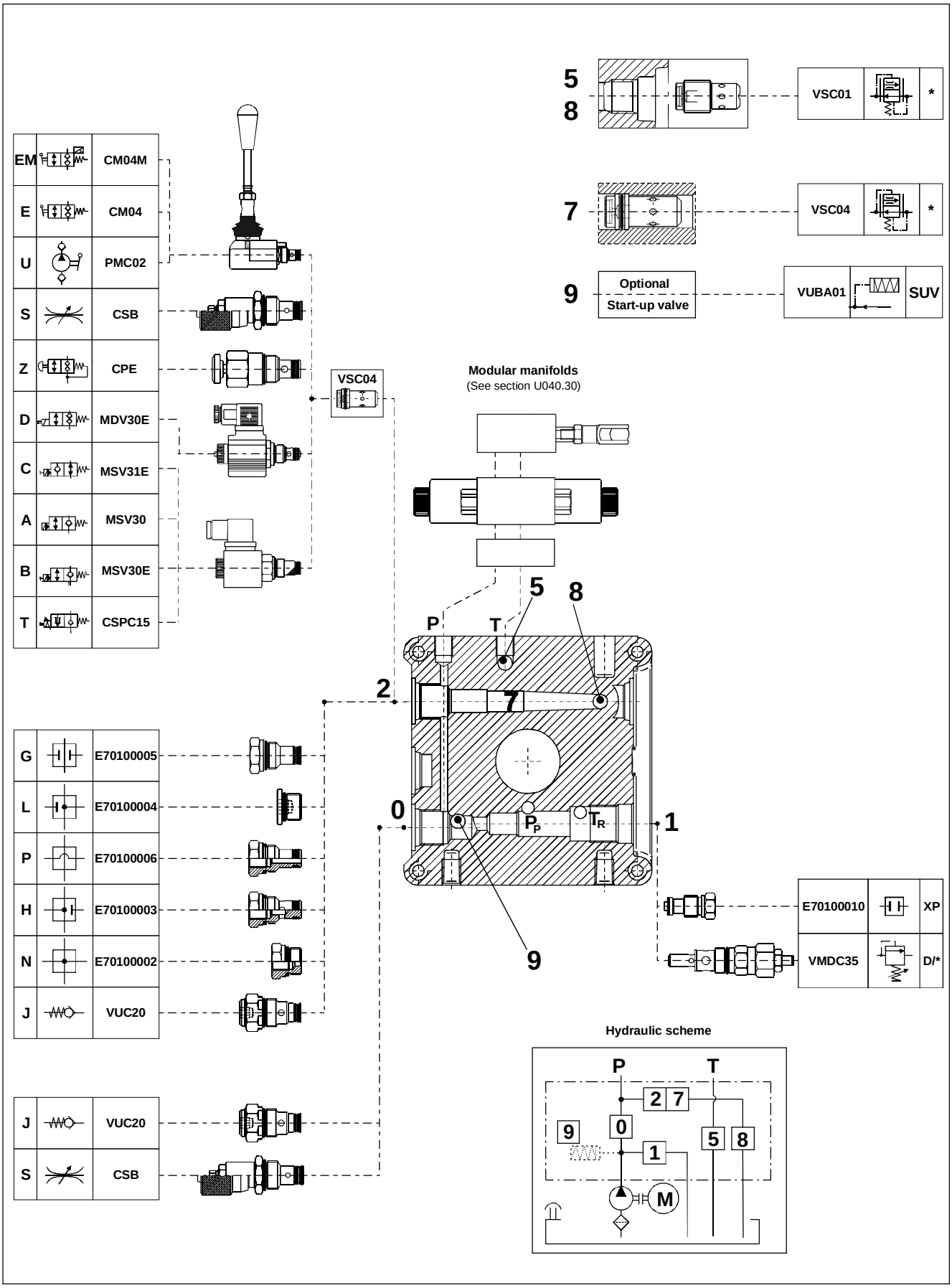

www.hydronit.com
E-mail: sales@hydronit.com
Fax +39 03621841214

Universal central manifold “U4” execution valve combinations

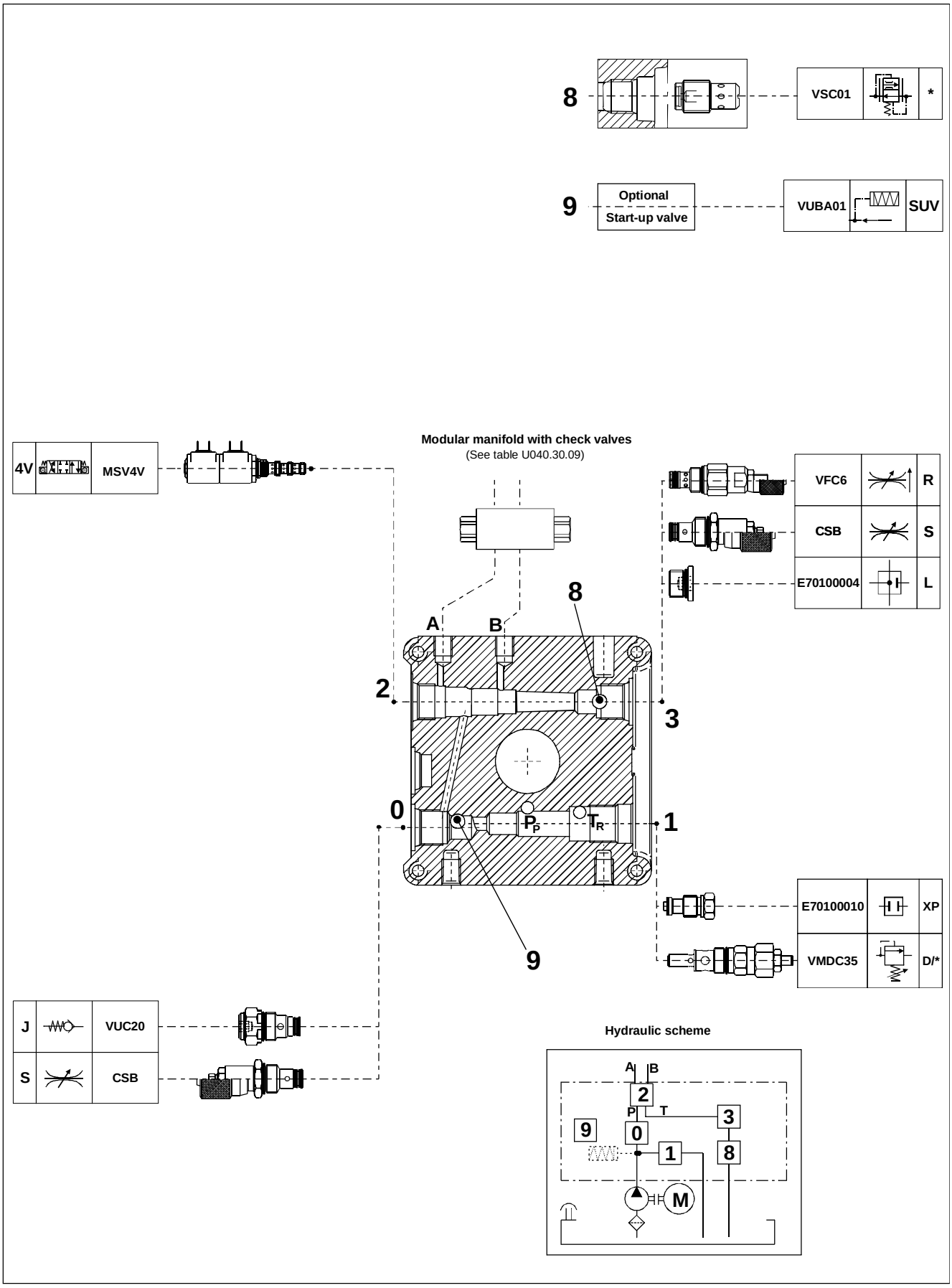

www.hydronit.com
E-mail: sales@hydronit.com
Fax +39 03621841214

Universal central manifold “UB” and “UR” execution valve combinations

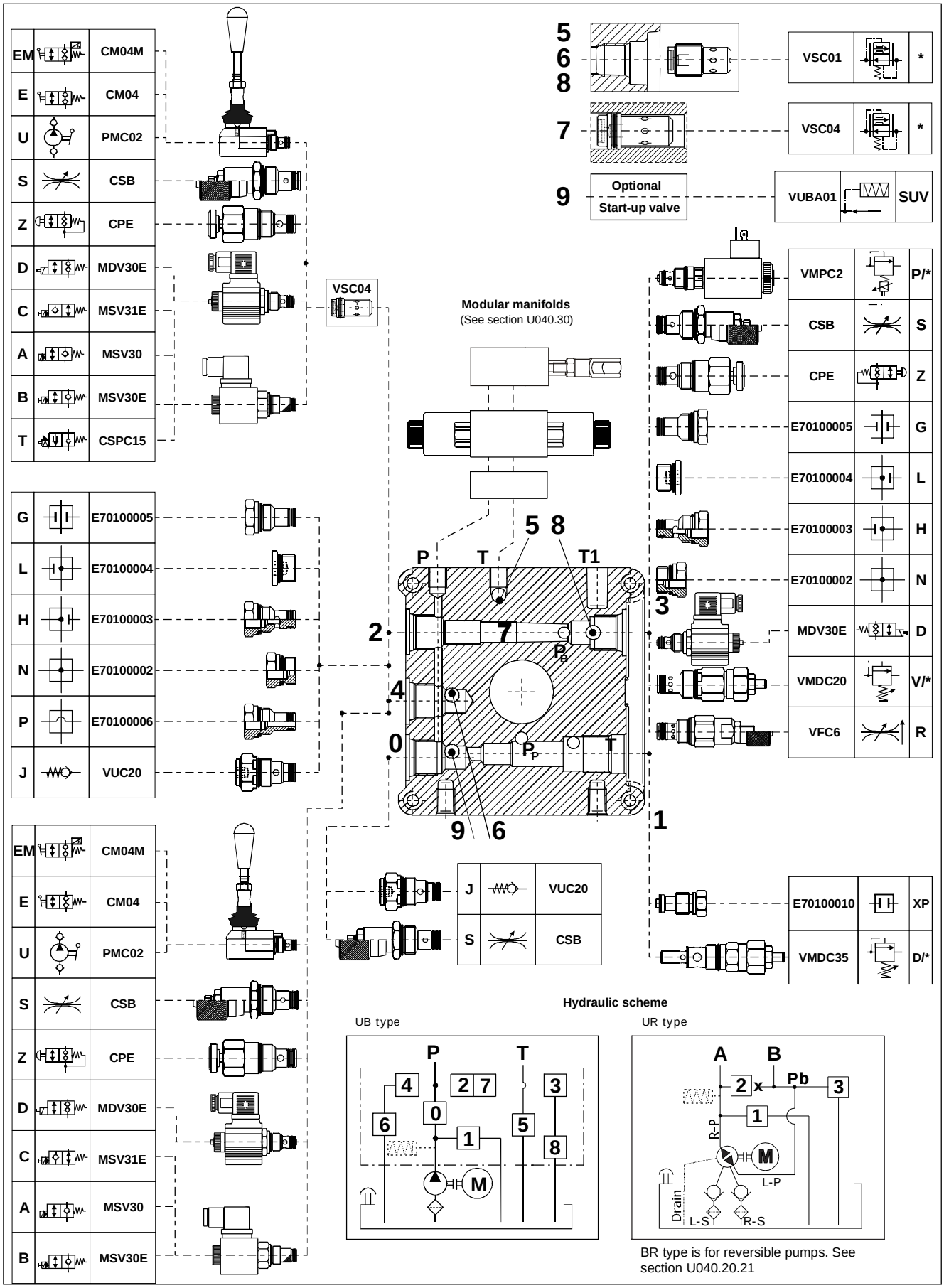

BR type is for reversible pumps. See section U040.20.21

www.hydronit.com
E-mail: sales@hydronit.com
Fax +39 03621841214

Universal central manifolds overall dimensions

Type	Spare part code
UA	E60104020
UB	E60104021
U4	E60104022
UR	E60104023

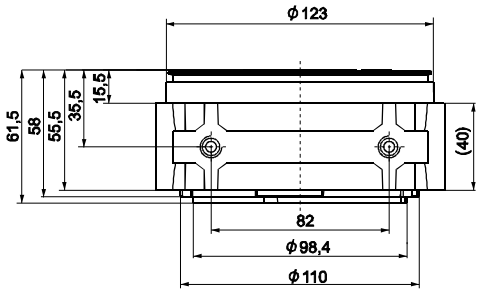

Weight: 1,10 kg

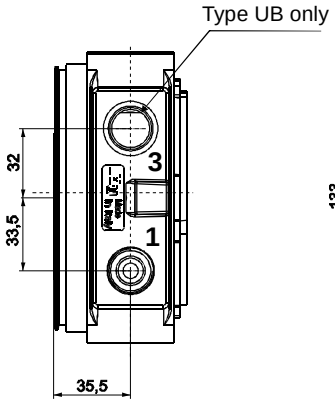

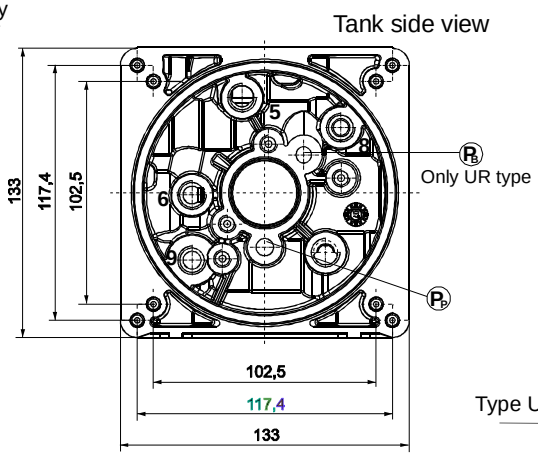

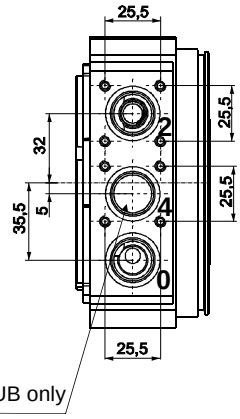

Cavity	Threads
1	M20x1,5 (relief valve)
0, 2, 3, 4	3/4-16 UNF
P-T	1/4" BSPP
T_1	1/4" BSPP (threaded on request only)
5, 6, 8, 9	1/4" BSPP (9 threaded on request only)
External manifold attachment	2 pcs M8 tie-rods 4 pcs M6 tie-rods
Tanks attachment	4 pcs M6x14
Integral AC Motors attachment	4 pcs M8x25
DC Motors attachment	2 pcs M6x14 or M6 tie rods
Pump attachments	2 pcs M8 (see pump lenght on the relevant tables)
Foot mounting support attachments	2 pcs M10x18
PMC hand pump / CM lever valve cap attachments	2 pcs M5x45

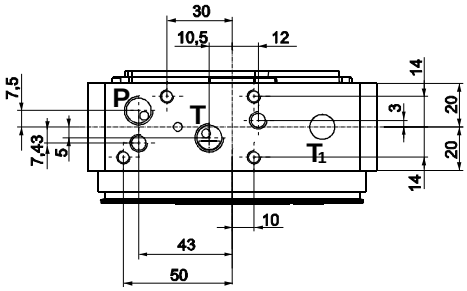

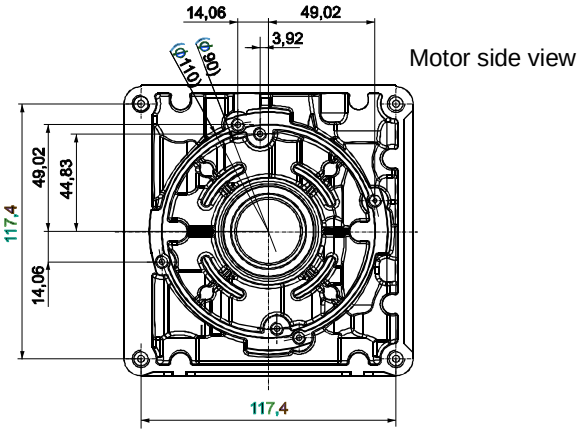

Section 20

INTEGRAL COMPONENTS AND PUMPS

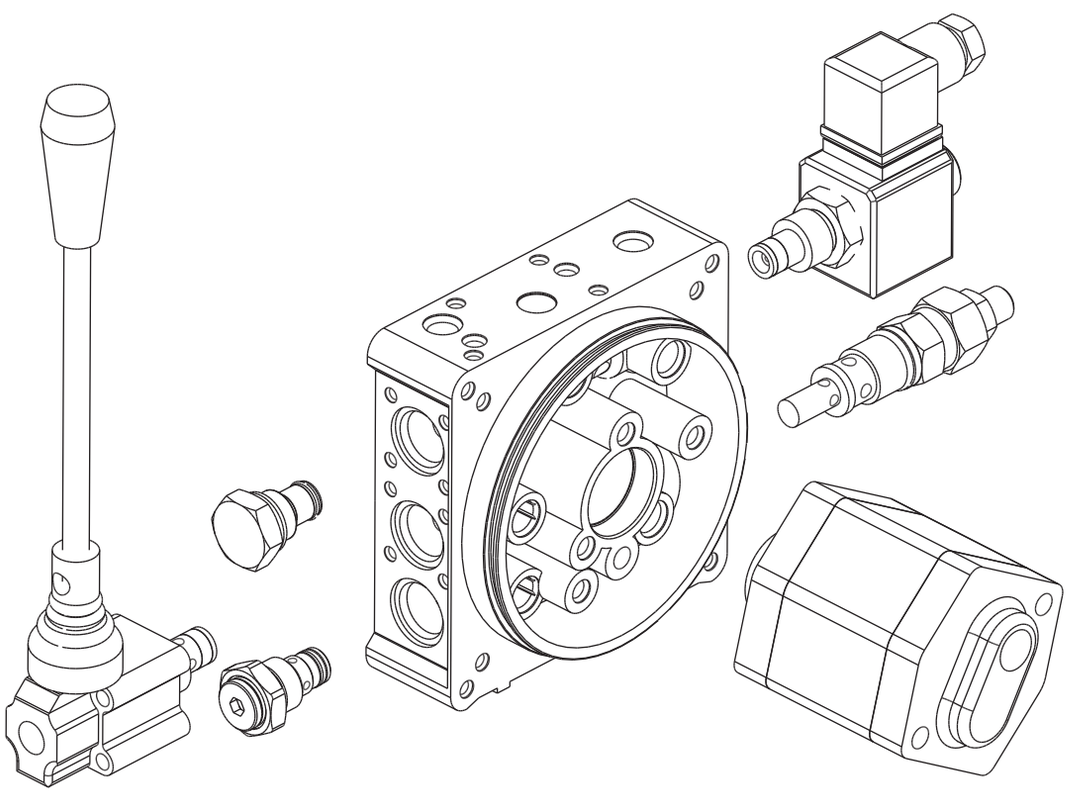

www.hydronit.com
E-mail: sales@hydronit.com
Fax +39 03621841214

VMDC35 - Direct acting main relief valve

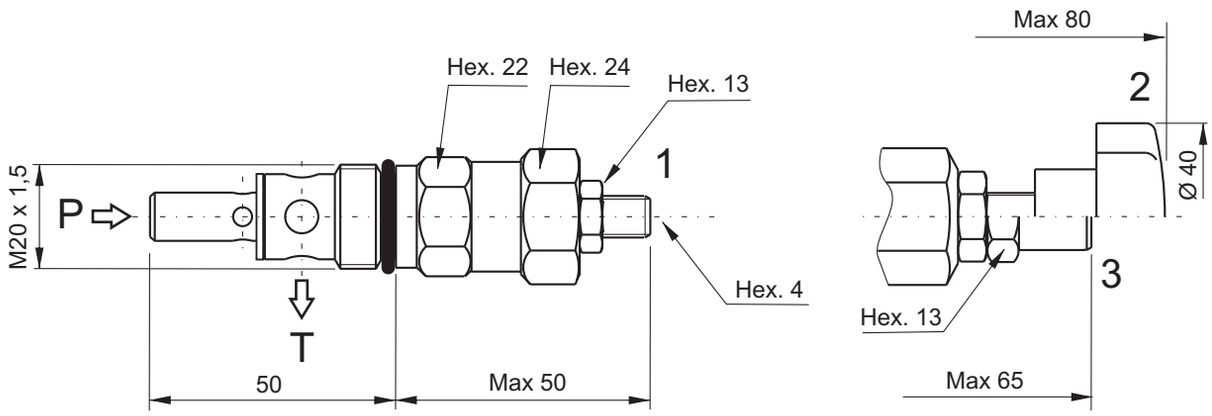

Spare part code

VMDC	**Direct acting main relief valve**
35	**Nominal size:** 35 = 35 l/min
B	**Working range:** L = 10 ÷ 60 bar; A = 20 ÷ 180 bar; B = 35 ÷ 280 bar; C = 60 ÷ 350 bar
1	**Option:** 1 = screw (std); 2 = handwheel; 3 = with cap; 4 = plastic seal

PPC assembly code field

D/*** ♦

where *** stands for max setting pressure [bar]. Ex. D/280

where ♦ stands for option other than the standard one.

Mounting cavities

0	1		
2	3	4	
5	6	7	8

Note: cavities 3, 4 and 6 are present on central manifold type UB only.

Hydraulic symbol

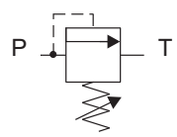

Main features

Max pressure	450 bar
Max flow	35 l/min
Weight	0,16 kg

Recommended tightening torque: 50 Nm
Recommended filtration settings: 25 ÷ 50 µ
Oil temperature: -30 ÷ + 80 °C

Minimum setting pressure

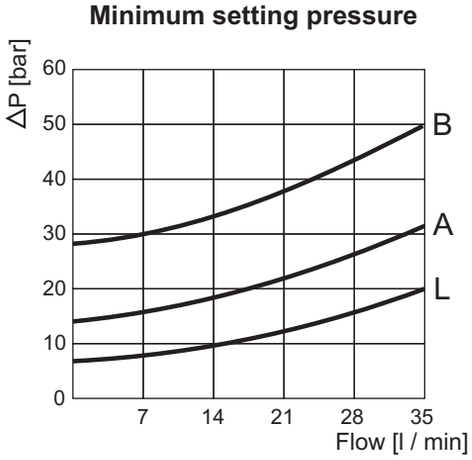

Pressure vs flow

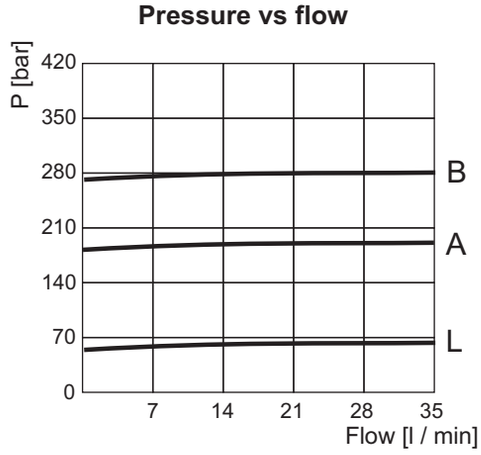

Note: Values measured on valve alone (no cavity) with an oil viscosity of 46 cSt at 50 °C. Pressure drop may change depending on fluid viscosity and temperature

www.hydronit.com
E-mail: sales@hydronit.com
Fax +39 03621841214

VMDC20 - Direct acting relief valve

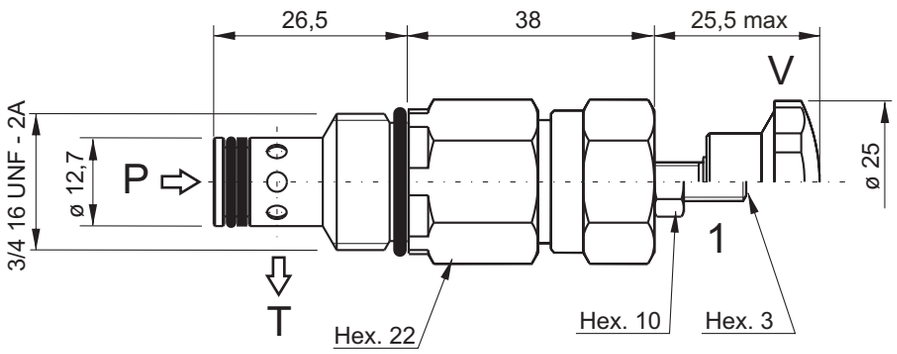

Spare part code

VMDC	**Direct acting relief valve**
20	**Nominal size:** 20 = 20 l/min
B	**Working range:** A = 10 ÷ 40 bar; B = 20 ÷ 110 bar; C = 30 ÷ 250 bar; D = 70 ÷ 350 bar
1	**Adjustment:** 1 = screw (std); V = handwheel

PPC assembly code field

V* ♦**

where *** stands for max setting pressure [bar]. Ex. V250

where ♦ stands for adjustment other than the standard one

Mounting cavities

0	1		
2	**3**	4	
5	6	7	8

Note: cavities 3, 4 and 6 are present on central manifold type UB only.

Hydraulic symbol

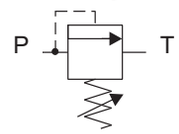

Main features

Max pressure	350 bar
Max flow	20 l/min
Weight	0,14 kg

Recommended tightening torque: 40 Nm
Recommended filtration settings: 25 ÷ 50 µ
Oil temperature: -30 ÷ + 80 °C

Minimum setting pressure

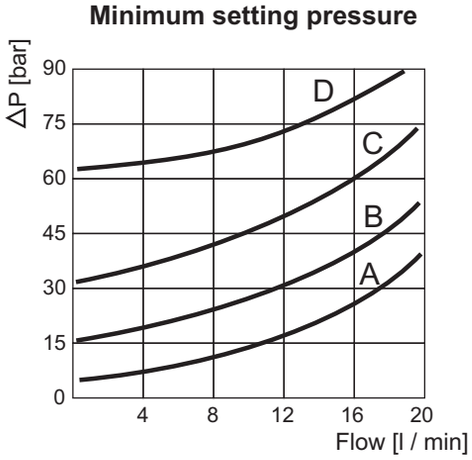

Pressure vs flow

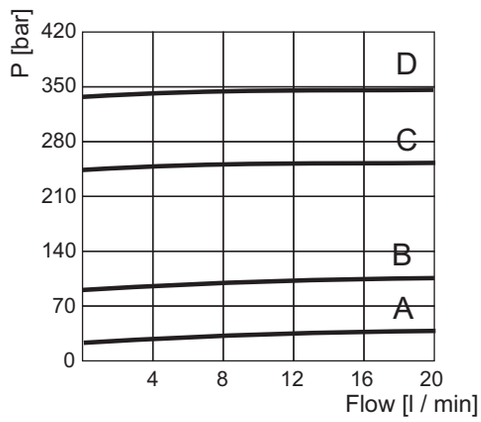

Note: Values measured on valve alone (no cavity) with an oil viscosity of 46 cSt at 50 °C. Pressure drop may change depending on fluid viscosity and temperature

www.hydronit.com
E-mail: sales@hydronit.com
Fax +39 03621841214

VCF6 - Pressure compensated flow control valve

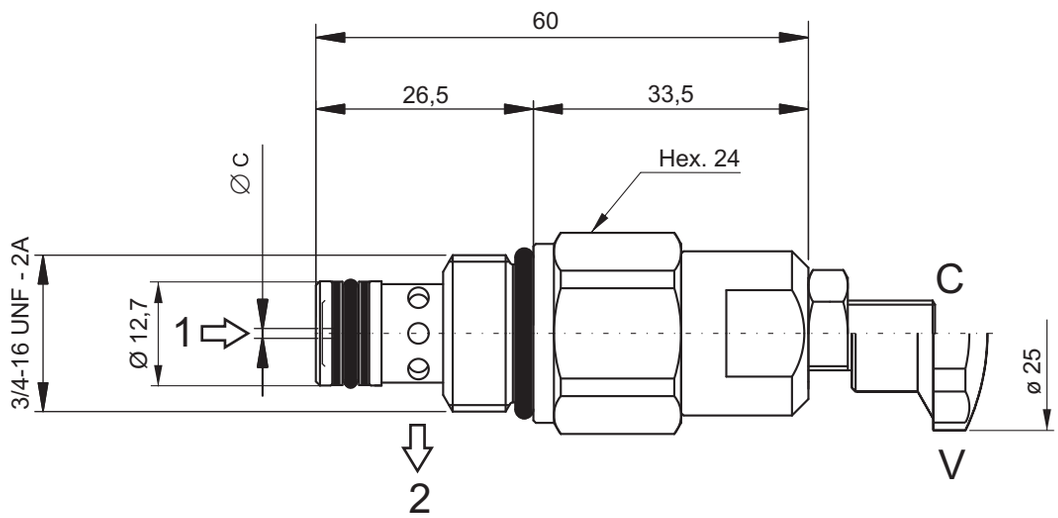

Spare part code

VCF6	**Flow control valve pressure compensated**
*	**Nominal dimension:** See table below
C	**Adjustment:** C = screw (std) V = handwheel

PPC assembly code field

R *

where * stands for nominal dimension

Mounting cavities

0	1		
2	**3**	4	
5	6	7	8

Note: cavities 3, 4 and 6 are present on central manifold type UB only.

Hydraulic symbol

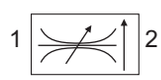

Main features

Max pressure	350 bar
Max flow	18 l/min
Weight	0,11 Kg

Recommended tightening torque: 25 Nm
Recommended filtration settings: 25 ÷ 50 µ
Oil temperature: -30 ÷ + 80 °C

Nominal dimension	∅ C	Controlled flow at 100 bar ± 10% l/min
2	0,6	1,0 - 2,2
3	1,0	1,6 - 4,0
4	1,2	2,5 - 5,0
5	1,8	3,0 - 7,0
6	2,8	4,9 - 10,8
7	4,8	8,0 - 18,5

Pressure drop diagram

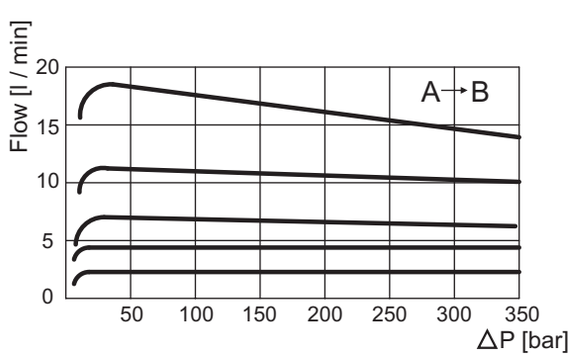

Note: Values measured on valve alone (no cavity) with an oil viscosity of 46 cSt at 50 °C. Pressure drop may change depending on fluid viscosity and temperature

www.hydronit.com
E-mail: sales@hydronit.com
Fax +39 03621841214

CSB - Bidirectional flow control valve

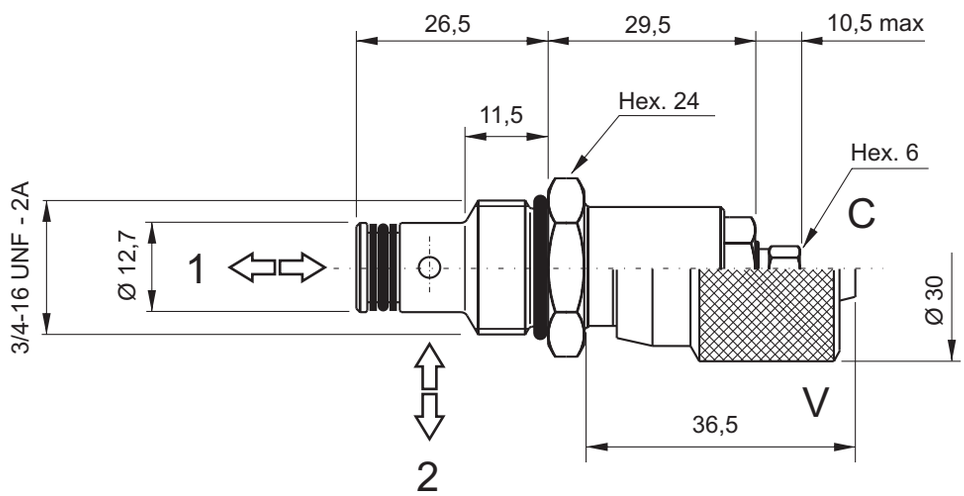

Spare part code

CSB	**Flow control valve**
04	**Nominal size:** 04 = 3/4-16 UNF
C	**Adjustment:** C = screw (std) V = handwheel

PPC assembly code field

S

Mounting cavities

0	1		
2	3	4	
5	6	7	8

Note: cavities 3, 4 and 6 are present on central manifold type UB only.

Hydraulic symbol

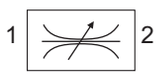

Main features

Max pressure	300 bar
Max flow	15 l/min
Weight	0,08 Kg

Recommended tightening torque: 25 Nm
Recommended filtration settings: 25 ÷ 50 µ
Oil temperature: -30 ÷ + 80 °C

Pressure drop diagram

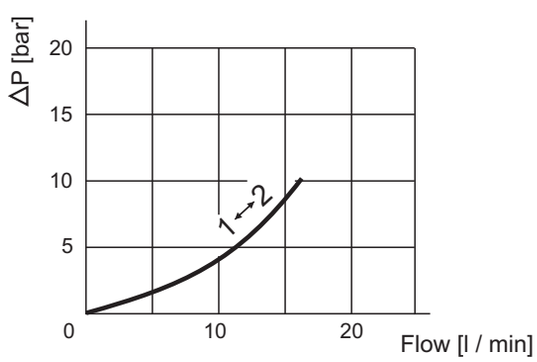

Note: Values measured on valve alone (no cavity) with an oil viscosity of 46 cSt at 50 °C. Pressure drop may change depending on fluid viscosity and temperature

www.hydronit.com
E-mail: sales@hydronit.com
Fax +39 03621841214

VSC01 - Pressure compensated fixed flow control valve

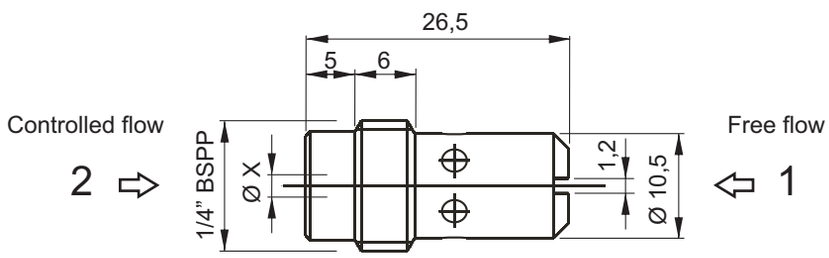

Typical application

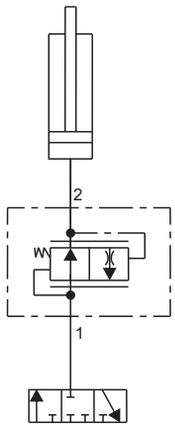

Spare part code

VSC	**Flow control valve pressure compensated**
01	**Nominal size:** 01= 1/4" BSPP
E	**Controlled flow:** A, B, C, D, E, F H, L, M, N

PPC assembly code field

Nominal controlled flow [l/min]	**(01)**

Ex. 5(01)

Mounting cavities

0	1		
2	3	4	
5	**6**	7	**8**

Note: cavities 3, 4 and 6 are present on central manifold type UB only.

Hydraulic symbol

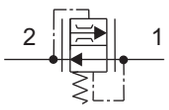

Main features

Max pressure	250 bar
Max flow	15 l/min
Weight	0,012 kg

Recommended tightening torque: 6 Nm
Recommended filtration settings: 25 ÷ 50 µ
Oil temperature: -30 ÷ + 80 °C

Controlled flow through X port 2 → 1

Spare part code	Ø X [mm]	Nominal controlled flow [l/min]
VSC01A	1	1
VSC01B	1,2	2
VSC01C	1,5	3
VSC01D	1,7	4
VSC01E	1,9	5
VSC01F	2,1	6
VSC01H	2,5	8
VSC01L	2,8	10
VSC01M	3	12
VSC01N	5	15

Note: nominal controlled flow, measured at 100 bar with an oil viscosity of 46 cSt at 40 °C, are to be taken as general reference values and must be tested on the field.

Free flow pressure drop 1 → 2

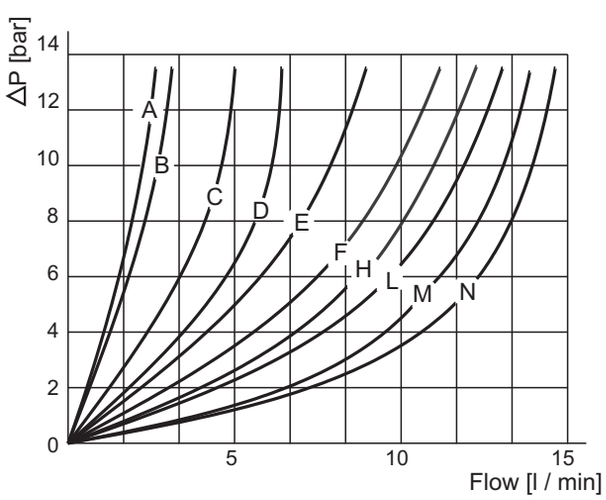

Note: Values measured on valve alone (no cavity) with an oil viscosity of 46 cSt at 40 °C. Pressure drop may change depending on fluid viscosity and temperature

www.hydronit.com
E-mail: sales@hydronit.com
Fax +39 03621841214

VSC04 - Pressure compensated fixed flow control valve

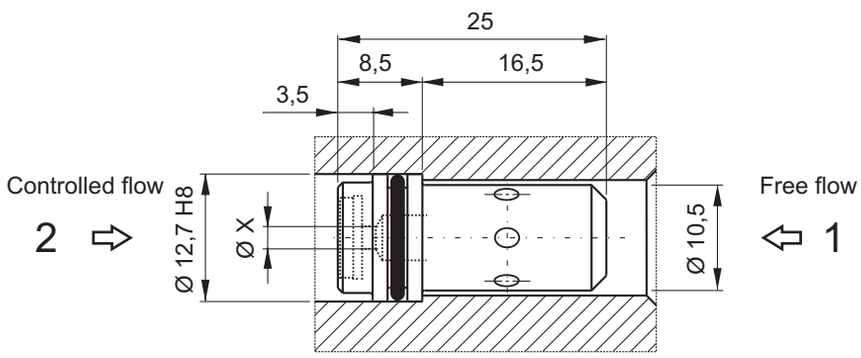

Typical application

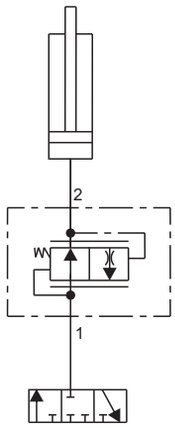

Spare part code

VSC	Flow control valve pressure compensated
04	Nominal size: 04
02	Controlled flow: 00, 01, 02, 03, 04, 05 06, 08, 10, 12, 15

PPC assembly code field

Nominal controlled flow [l/min]	(04)

Ex. 5(04)

Mounting cavities

0	1		
2	3	4	
5	6	**7**	8

Note: cavities 3, 4 and 6 are present on central manifold type UB only.

Hydraulic symbol

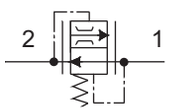

Main features

Max pressure	250 bar
Max flow	15 l/min
Weight	0,012 kg

Recommended filtration settings: 25 ÷ 50 µ
Oil temperature: -30 ÷ + 80 °C

Controlled flow through X port 2 → 1

Spare part code	Ø X [mm]	Nominal controlled flow [l/min]
VSC0400	Closed	0
VSC0401	0,8	1
VSC0402	1	2
VSC0403	1,25	3
VSC0404	1,5	4
VSC0405	1,75	5
VSC0406	2	6
VSC0408	2,75	8
VSC0410	3,5	10
VSC0412	4	12
VSC0415	5	15

Note: nominal controlled flow, measured at 100 bar with an oil viscosity of 46 cSt at 50 °C, are to be taken as general reference values and must be tested on the field

Free flow pressure drop 1 → 2

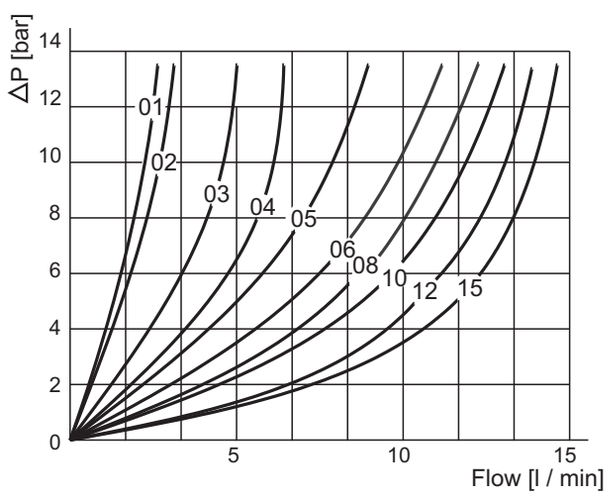

Note: Values measured on valve alone (no cavity) with an oil viscosity of 46 cSt at 50 °C. Pressure drop may change depending on fluid viscosity and temperature

www.hydronit.com
E-mail: sales@hydronit.com
Fax +39 03621841214

VUC20 - Basic check valve

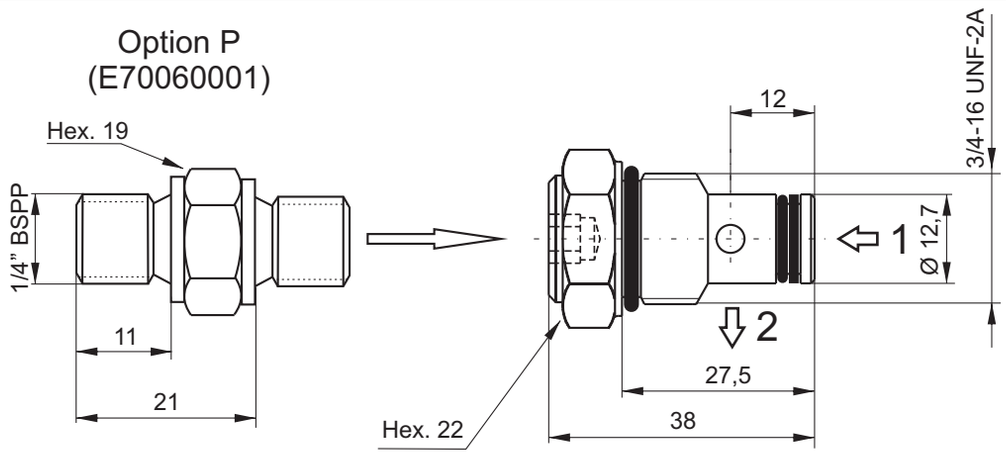

This part is tipically used to connect a pressure gauge for statical pressure measurement.
It is not suitable for istantaneous pressure measurement.

Spare part code

VUC	**Check valve**
20	**Nominal size:** 20
-	**Options:** - = no options P = pressure port 1/4" BSPP

PPC assembly code field

J *

where * stands for optional pressure port

Mounting cavities

0	1		
2	3	4	
5	6	7	8

Note: cavities 3, 4 and 6 are present on central manifold type UB only.

Hydraulic symbol

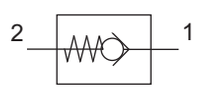

Main features

Max pressure	350 bar
Max flow	25 l/min
Weight	0,052 Kg
Cracking pressure	1 bar

Recommended tightening torque: 40 Nm
Recommended filtration settings: 25 ÷ 50 µ
Oil temperature: -30 ÷ + 80 °C

Pressure drop diagram

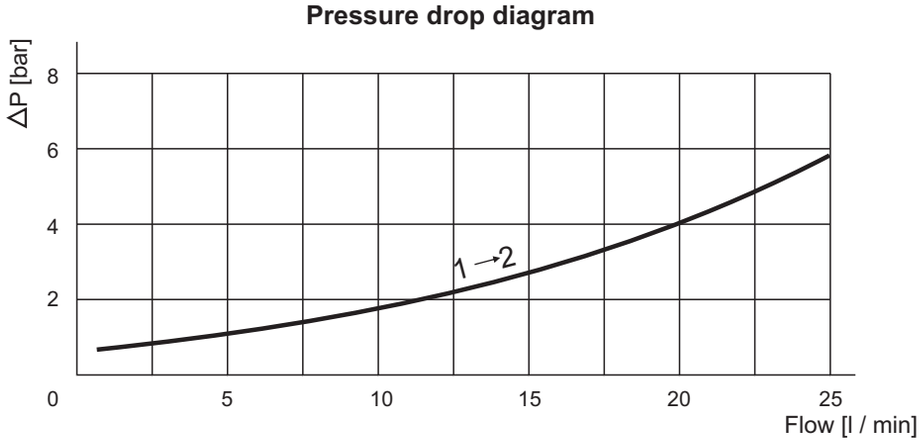

Note: Values measured on valve alone (no cavity) with an oil viscosity of 46 cSt at 50 °C. Pressure drop may change depending on fluid viscosity and temperature

www.hydronit.com
E-mail: sales@hydronit.com
Fax +39 03621841214

CPE - Manual emergency valve

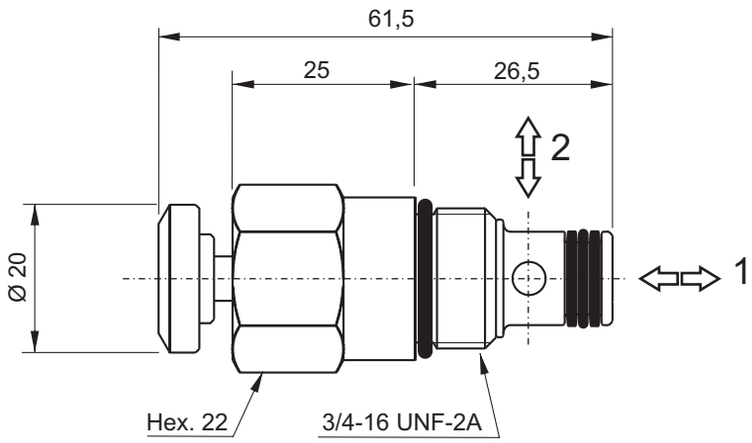

Spare part code

CPE	Two-way manual emergency valve
04	Nominal size: 04 = 3/4-16 UNF
P	Operating device: P = press button

PPC assembly code field

Z

Mounting cavities

0	1		
2	3	4	
5	6	7	8

Note: cavities 3, 4 and 6 are present on central manifold type UB only.

Hydraulic symbol

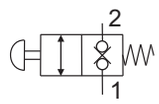

Main features

Max pressure	300 bar
Max flow	25 l/min
Weight	0,12 Kg

Recommended tightening torque: 25 Nm
Recommended filtration settings: 25 ÷ 50 µ
Oil temperature: -30 ÷ + 80 °C

Pressure drop diagram

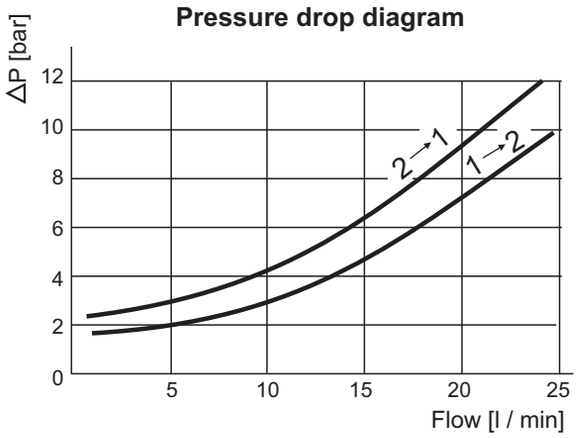

Note: Values measured on valve alone (no cavity) with an oil viscosity of 46 cSt at 50 °C. Pressure drop may change depending on fluid viscosity and temperature

Operating force (daN) on the press button

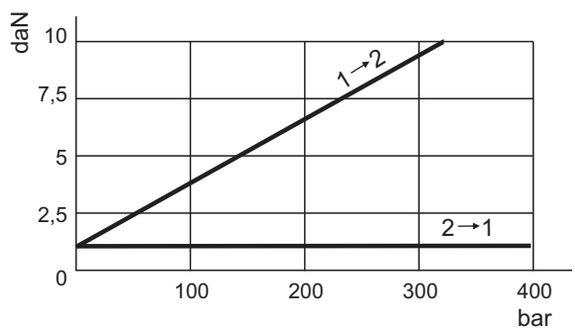

www.hydronit.com
E-mail: sales@hydronit.com
Fax +39 03621841214

CM - Manual lever valve

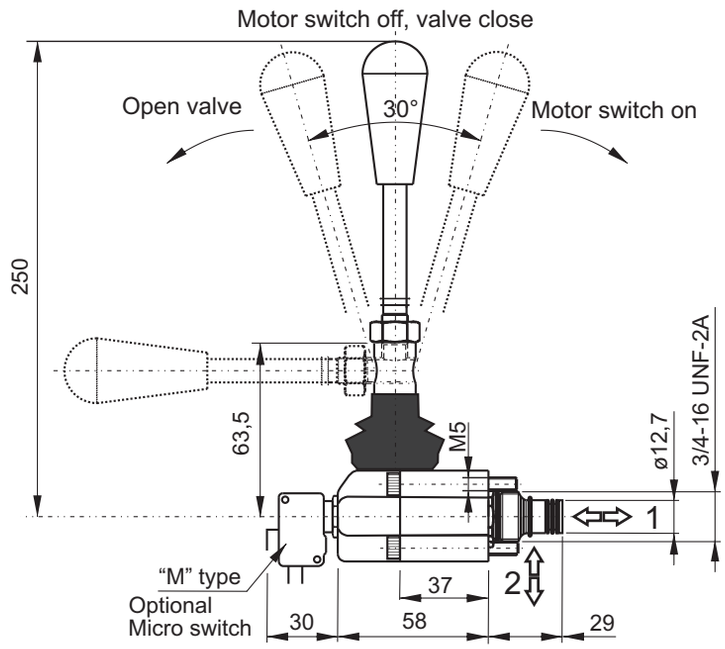

Spare part code

CM	**Two-way manual lever valve**
04	**Nominal size:** 04 = 3/4-16 UNF
L	**Type:** L = lever (std) M = lever + micro switch

PPC assembly code field

E (CM04L)
EM (CM04M)

Mounting cavities

0	1		
2	3	**4**	
5	6	7	8

Note: cavities 3, 4 and 6 are present on central manifold type UB only.

Hydraulic symbol

CM04L **CM04M**

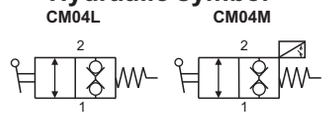

Main features

Max pressure	300 bar
Max flow	25 l/min
Weight	0,34 Kg
Micro switch max current	10 A - 400V 16 A - 250V

Fixing bolts: 4x M5x45 (tightening torque: 5 Nm)
Recommended cartridge tightening torque: 20 Nm
Recommended filtration settings: 25 ÷ 50 µ
Oil temperature: -30 ÷ + 80 °C

Pressure drop diagram

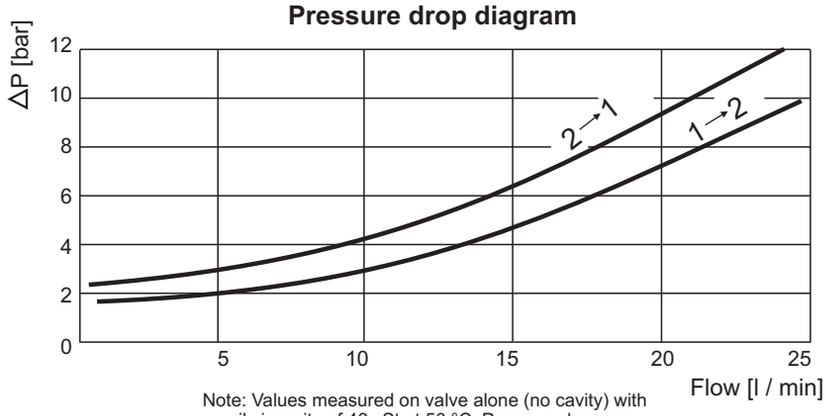

Note: Values measured on valve alone (no cavity) with an oil viscosity of 46 cSt at 50 °C. Pressure drop may change depending on fluid viscosity and temperature

www.hydronit.com
E-mail: sales@hydronit.com
Fax +39 03621841214

PMC - Cartridge hand pump

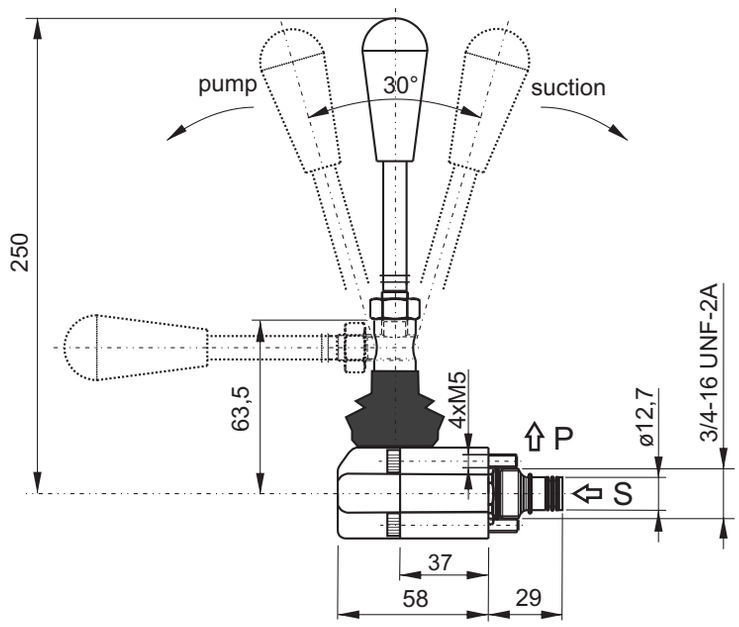

Spare part code

PMC	**Hand pump**
02	**Nominal size:** 02 = 2 cc/stroke
L	**Type:** L = lever (std)

PPC assembly code field

U

Mounting cavities

0	1		
2	3	4	
5	6	7	8

Note: cavities 3, 4 and 6 are present on central manifold type UB only.

Hydraulic symbol

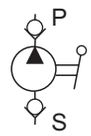

Main features

Max pressure	200 bar
Max flow	-
Weight	0,34 Kg

Fixing bolts: 4x M5x45 (tightening torque: 5 Nm)
Recommended cartridge tightening torque: 15 Nm
Recommended filtration settings: 25 ÷ 50 µ
Oil temperature: -30 ÷ + 80 °C

Effort (daN)
operating on the lever end

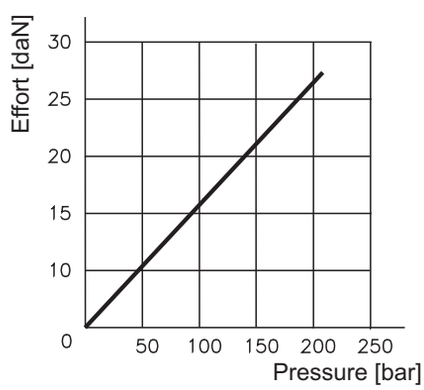

www.hydronit.com
E-mail: sales@hydronit.com
Fax +39 03621841214

MSV - Pilot operated two-way single locking solenoid valve

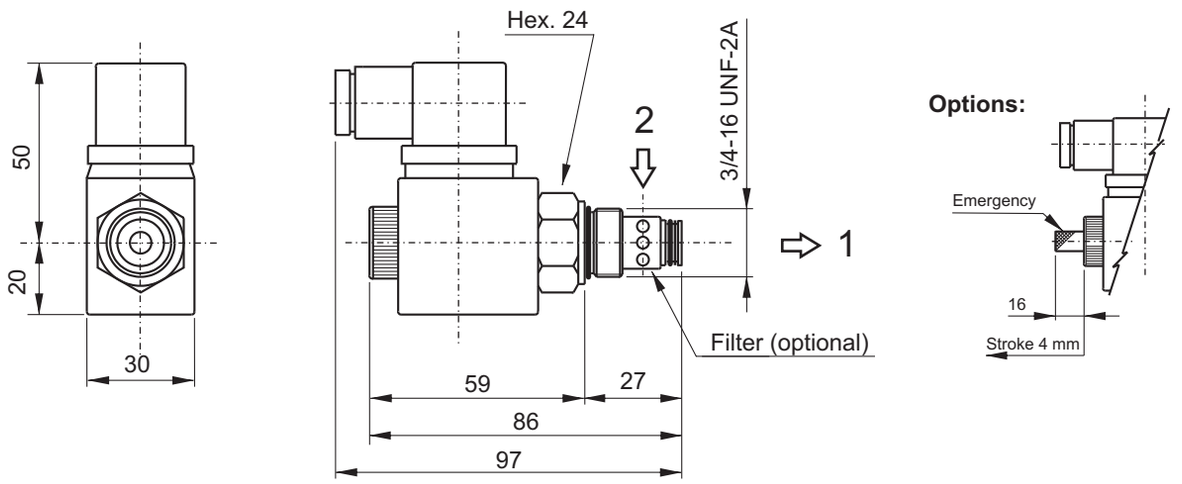

Spare part code

MSV	**Two-way pilot operated solenoid valve**
30	**Operation:** 30 = normally closed; 31 = normally open
0	**Options:** 0 = no options (std); E = emergency
0000	**Supply voltage:** 0000 = no coil (std); see below table

PPC assembly code field

A (MSV30) **Voltage**
B (MSV30E) **Voltage**
C (MSV31E) **Voltage**

Ex: A12DC

Mounting cavities

0	1		
2	**3**	**4**	
5	6	7	8

Note: cavities 3, 4 and 6 are present on central manifold type UB only.

Hydraulic symbol

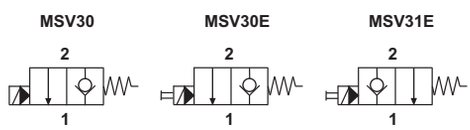

Main features

Max pressure	210 bar (up to 300bar*)
Max flow	20 l/min
Weight	0,27 Kg (with coil)
Coil thermal insulation	Class F (Class H*)
Electric connection	DIN 43650-A / ISO 4400
Coil protection degree	IP 65 / DIN 40050
Duty cycle	ED 75% (ED 100%*)
Voltage required	+/- 10% nominal voltage
Normatives	EN50081-1/EN50082-2 (89/336 CEE electromagnetic comp.) 73/23/CEE / 96/68/CEE (low voltage)

*: with M140 series coils only. See table U040.20.12 coils selection. The max flow/max pressure cannot be achieved at the same time.

Coils selection

Supply voltage (V)	Coil type	Spare coil code	Spare connector code	Holding power consumption
12DC	12DC	M13040001	KA132000B1	18W
24DC	24DC	M13040002	KA132000B1	18W
24AC/ 50 Hz 60 Hz	24DC	M13040002	KA132R11B1	18W
115AC/ 50 Hz 60 Hz	110RC	M13040004	KA132R12B1	18W
230AC/ 50 Hz 60 Hz	220RC	M13040005	KA132R13B1	18W
115AC/50Hz*	115/50AC	M13040006	KA132000B1	28VA
230AC/50Hz*	230/50AC	M13040007	KA132000B1	28VA

*Only for MSV30*NC valves.
Other voltages and electric connectors types (Amp Juior, flying leads,...) are available on request.
Inrush power consumption can be up to 3,5 times higher than the holding one.

Recommended tightening torque: 45 Nm
Recommended filtration settings: 25 ÷ 50 µ
Oil temperature: -30 ÷ + 80 °C

Pressure drop diagram

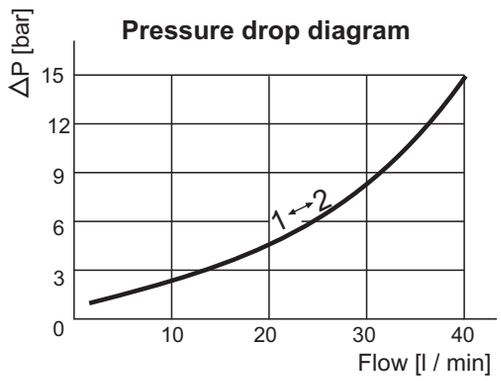

Note: Values measured on valve alone (no cavity) with an oil viscosity of 46 cSt at 50 °C. Pressure drop may change depending on fluid viscosity and temperature

www.hydronit.com
E-mail: sales@hydronit.com
Fax +39 03621841214

MDV - Direct operated two-way double blocking solenoid valve

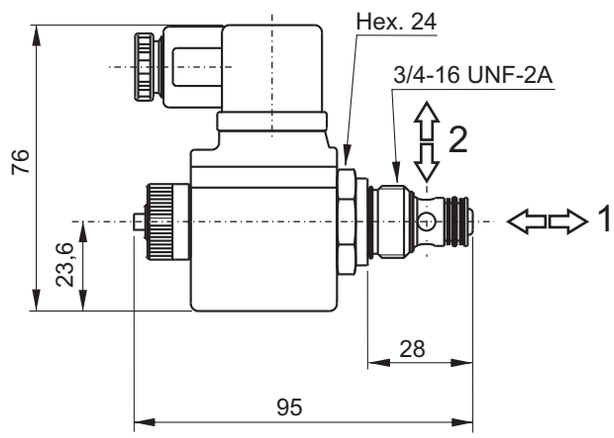

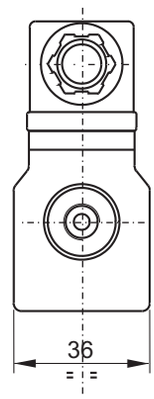

Spare part code

MDV	**Two-way double blocking solenoid valve**
30	**Operation:** 30 = normally closed
E	**Options:** E = emergency (std)
0000	**Supply voltage:** 0000 = no coil (std) see below table

PPC assembly code field

D Voltage

Ex: D24DC

Mounting cavities

0	1		
2	**3**	**4**	
5	6	7	8

Note: cavities 3, 4 and 6 are present on central manifold type UB only.

Hydraulic symbol

MDV30E

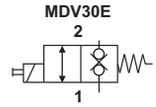

Main features

Max pressure	250 bar
Max flow	15 l/min
Weight	0,34 Kg (with coil)
Coil thermal insulation	Class H
Electric connection	DIN 43650-A / ISO 4400
Coil protection degree	IP 65 / DIN 40050
Duty cycle	ED 100%
Voltage required	+/- 10% nominal voltage
Normatives	EN50081-1/EN50082-2 (89/336 CEE electromagnetic comp.) 73/23/CEE / 96/68/CEE (low voltage)

Note: On request version with max flow 25 l/min and max pressure 210 bar is avaiable.

Coils selection

Supply voltage (V)	Coil type	Spare coil code	Spare connector code	Holding power consumption
12DC	12DC	M14040001	KA132000B1	22W
24DC	24DC	M14040002	KA132000B1	22W
24AC/ 50 Hz 60 Hz	24DC	M14040002	KA132R11B1	22W
115AC/ 50 Hz 60 Hz	110RC	M14040004	KA132R12B1	22W
230AC/ 50 Hz 60 Hz	220RC	M14040005	KA132R13B1	22W

Other voltages and electric connectors types (Amp Junior, flying leads,...) available on request.
Inrush power consumption can be up to 3,5 times higher than the holding one.

Recommended tightening torque:45 Nm
Recommended filtration settings: 25 ÷ 50 µ
Oil temperature: -30 ÷ + 80 °C

Pressure drop diagram

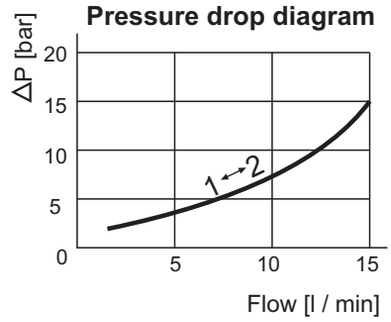

Note: Values measured on valve alone (no cavity) with an oil viscosity of 46 cSt at 50 °C. Pressure drop may change depending on fluid viscosity and temperature

www.hydronit.com
E-mail: sales@hydronit.com
Fax +39 03621841214

MSV4V - Direct operated 4/3 or 4/2 directional spool solenoid valve

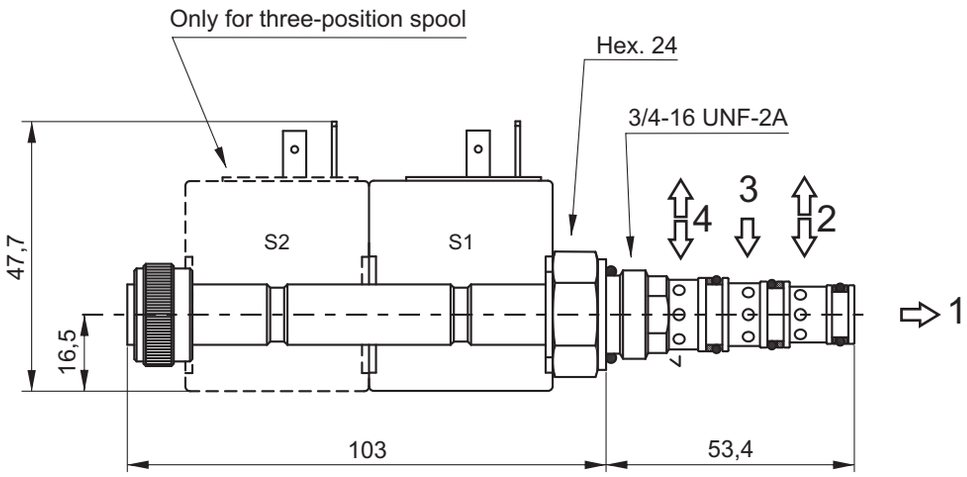

Spare part code

MSV4V — **4/3 or 4/2 directional spool solenoid valve**

A2 — **Spool and scheme:** see side table

00 — **Options:** 00 = std

24DC — **Supply voltage:** see below table

PPC assembly code field

4VA2 Voltage

Ex: 4VA2 24DC

Mounting cavities

0	1		
2	3	4	
5	6	7	8

Note: MSV4V can be mounted on central manifold type U4 only.

Note: cavities 3, 4 and 6 are present on central manifold type UB only.

Code	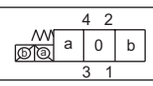

Double solenoid

A2*	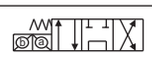
B2	
C2	
E2	

Single solenoid

A11C	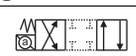

* = spools with price additional
Other spools are avaiable on request

Supply voltage (V)	Coil voltage	Spare coil code	Spare connector code	Holding power consumption
12DC	12DC	M14040001	KA132000B1	22W
24DC	24DC	M14040002	KA132000B1	22W
24AC/ 50 Hz 60 Hz	24DC	M14040002	KA132R11B1	22W
115AC/ 50 Hz 60 Hz	110RC	M14040004	KA132R12B1	22W
230AC/ 50 Hz 60 Hz	220RC	M14040005	KA132R13B1	22W

Other voltages and electric connectors types (Amp Junior, flying leads,...) available on request.
Inrush power consumption can be up to 3,5 times higher than the holding one.

Max pressure	210 bar
Max flow	12 l/min
Weight	0,37 Kg (1 solenoid) 0,64 Kg (2 solenoid)
Coil thermal insulation	Class H
Electric connection	DIN 43650-A/ISO 4400
Coil protection degree	IP 65/DIN 40050
Duty cycle	ED 100 %
Voltage required	+/- 10% nominal voltage
Recommended tightening torque	30 Nm
Oil temperature	-25 ÷ +70°C

www.hydronit.com
E-mail: sales@hydronit.com
Fax +39 03621841214

VMPC2 - Proportional relief valve

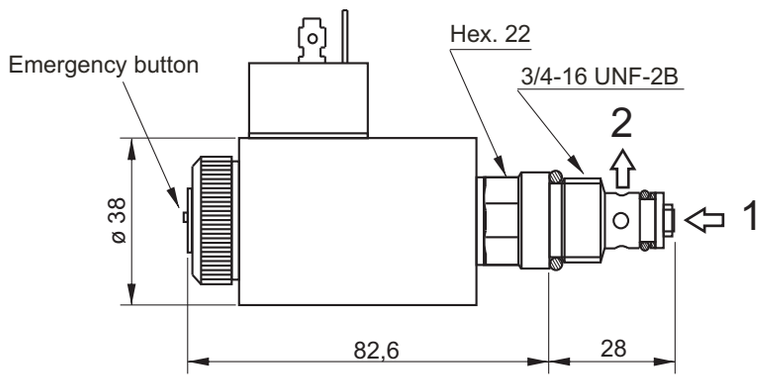

Spare part code

VMPC — **Direct acting proportional relief valve**

2 — **Nominal size:**
2 = 2 l/min

B — **Working range:**
A = 2 ÷ 80 bar
B = 3 ÷ 150 bar
C = 4 ÷ 250 bar
D = 7 ÷ 350 bar

E — **Option:**
E = emerg. (std)

0000 — **Supply voltage:**
- 0000 = no coil
- 12DC
- 24DC

PPC assembly code field

P* Voltage**

where *** stands for max setting pressure [bar]. Ex. P25012DC

Mounting cavities

0	1		
2	**3**	4	
5	6	7	8

Note: cavities 3, 4 and 6 are present on central manifold type UB only.

Hydraulic symbol

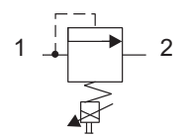

Main features

Max pressure	350 bar
Max flow	2 l/min
Weight	0,46 Kg (with coil)
Coil thermal insulation	Class H
Electric connection	DIN 43650-A / ISO 4400
Coil protection degree	IP 65 / DIN 40050
PWM	120 Hz
Hysteresis	5%
Duty cycle	ED 100%
Normatives	EN50081-1/EN50082-2 (89/336 CEE electromagnetic comp.) 73/23/CEE / 96/68/CEE (low voltage)

Recommended tightening torque: 30 Nm
Recommended filtration settings: 10 ÷ 25 µ
Oil temperature: -10 ÷ + 80 °C

Note: Supplying current to the coil from 0 to I max (see below diagram), a proportional pressure variation is obtained on port P.

For the controller see page U040.20.16

Coils selection

Supply voltage	Spare coil code	Spare connector code
12DC	M6306012	KA132000B1
24DC	M6306024	KA132000B1

Pressure vs flow

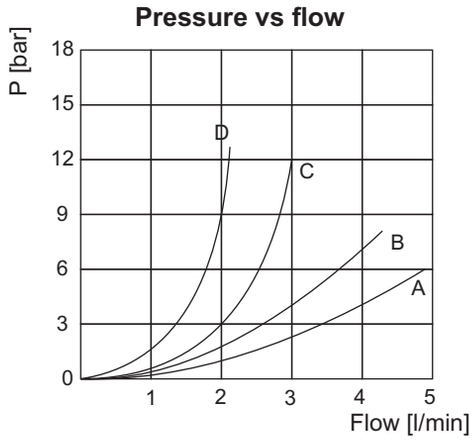

Note: Values measured on valve alone (no cavity) with an oil viscosity of 46 cSt at 50 °C. Pressure drop may change depending on fluid viscosity and temperature

Pressure vs current

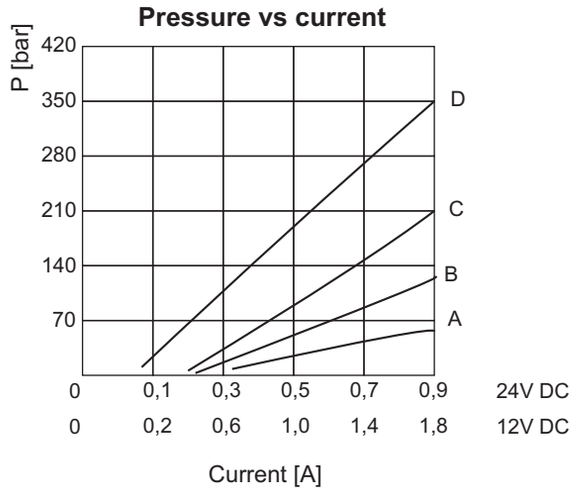

www.hydronit.com
E-mail: sales@hydronit.com
Fax +39 03621841214

CSPC15 - Proportional flow control valve

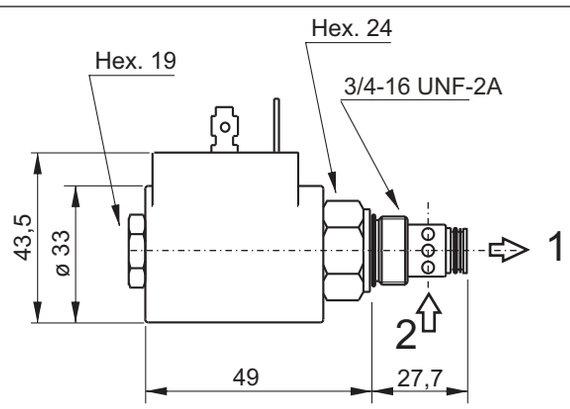

Spare part code

CSPC	**Proportional flow control valve**
15	**Nominal size:** 15 = 15 l/min
0	**Option:** 0 = no options
0000	**Supply voltage:** - 0000 = no coil - 12DC - 24DC

PPC assembly code field

T Voltage

Ex: T12DC

0	1		
2	3	**4**	
5	6	7	8

Note: cavities 3, 4 and 6 are present on central manifold type UB only.

Hydraulic symbol

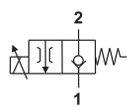

Main features

Max pressure	315 bar
Max flow	15 l/min
Weight	0,25 Kg (with coil)
Coil thermal insulation	Class H
Electric connection	DIN 43650-A / ISO 4400
Coil protection degree	IP 65 / DIN 40050
PWM	120 Hz
Hysteresis	5%
Duty cycle	ED 100%
Normatives	EN50081-1/EN50082-2 (89/336 CEE electromagnetic comp.) 73/23/CEE / 96/68/CEE (low voltage)

Recommended tightening torque: 30 Nm
Recommended filtration settings: 10 ÷ 25 µ
Oil temperature: -10 ÷ + 80 °C

Note: Supplying current to the coil from 0 to I max (see below diagram), a proportional flow variation is obtained on port P.

For the controller see page U040.20.16

Coils selection

Supply voltage	Spare coil code	Spare connector code
12DC	M6306012	KA132000B1
24DC	M6306024	KA132000B1

Pressure vs flow

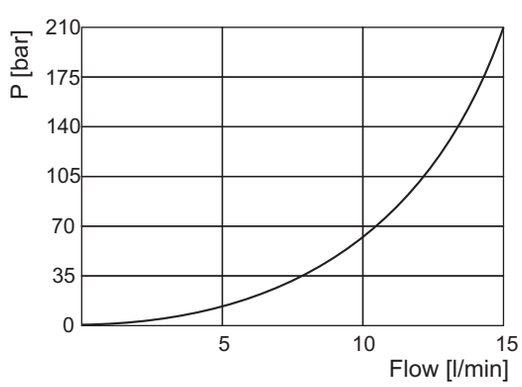

Note: Values measured on valve alone (no cavity) with an oil viscosity of 46 cSt at 50 °C. Pressure drop may change depending on fluid viscosity and temperature

Flow vs current

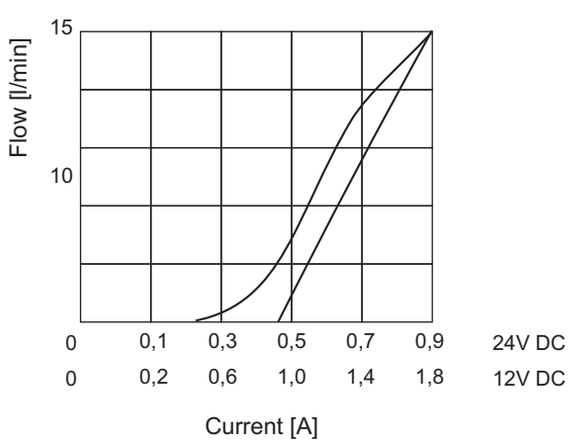

www.hydronit.com
E-mail: sales@hydronit.com
Fax +39 03621841214

VPC - Electronic amplifier for proportional solenoid valves

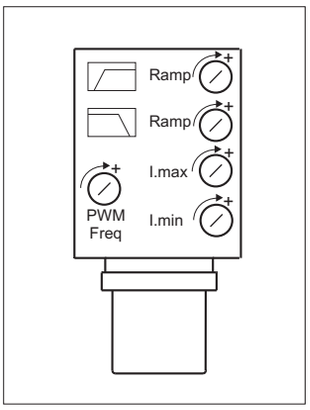

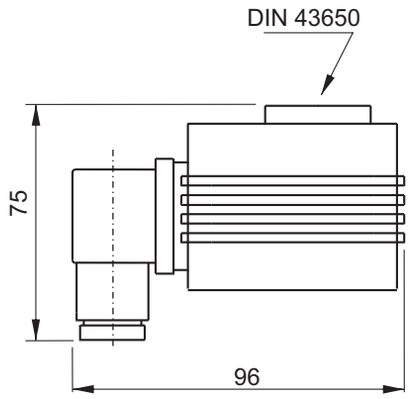

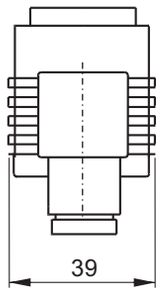

Weight: 0,11 Kg

Spare part code

VPC — **Electronic amplifier for solenoid valves**

00 — **Options**

Suitable for:
- CSPC15**** (see table U040.20.15.00)
- VMPC2**** (see table U040.20.14.00)

Main features

Supply voltage	12 / 24VDC
Voltage input signal range	0 - 10 V
Input impedance	100 kohm
Max current range	2,5A
Electric connection	DIN 43650-A / ISO 4400
Ramp adjustment (indipendent)	0 ÷ 3 s
PWM (optionally adjustable)	120 Hz (50 ÷ 400 Hz)
Working temperature	-10 ÷ +50 °C
Normatives	EN50081-1/EN50082-2 (89/336 CEE electromagnetic comp.) 73/23/CEE / 96/68/CEE (low voltage)

Instruction for use:

1) turn completely “I MIN” trimmer in counterclockwise direction;
2) adjust the external voltage input signal to the initial regulating (flow or pressure) value;
3) turn “I MIN” trimmer in clockwise direction until valve starts regulating;
4) adjust the external voltage input signal to the max value and adjust “I MAX” trimmer until the valve regulates the maximum flow or pressure on the hydraulic system.

Electric scheme

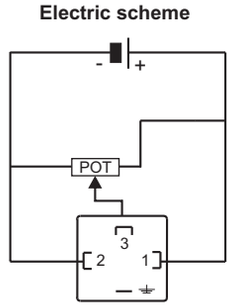

Ramp adjustment (up)

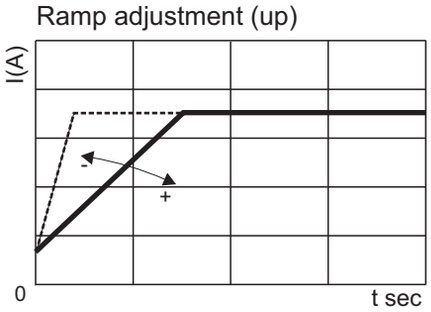

Ramp adjustment (down)

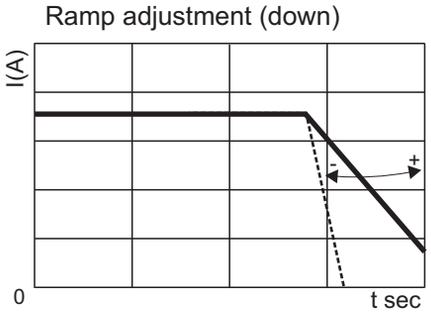

www.hydronit.com
E-mail: sales@hydronit.com
Fax +39 03621841214

Plugs

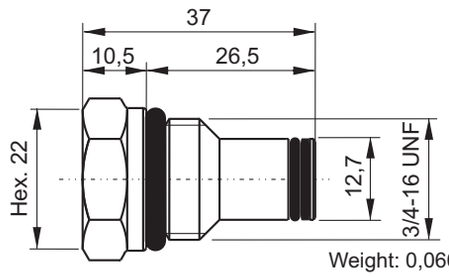 Weight: 0,066 Kg	**Hydraulic symbol** **Spare part code** **E70100005**	**PPC assembly code** **G** **Mounting cavities** 0 1 2 3 4 5 6 7 8
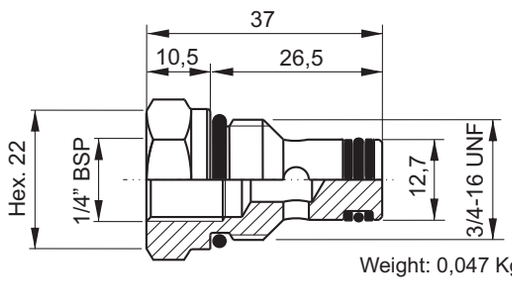 Weight: 0,047 Kg	**Hydraulic symbol** 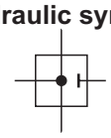 **Spare part code** **E70100003**	**PPC assembly code** **H** **Mounting cavities** 0 1 2 3 4 5 6 7 8
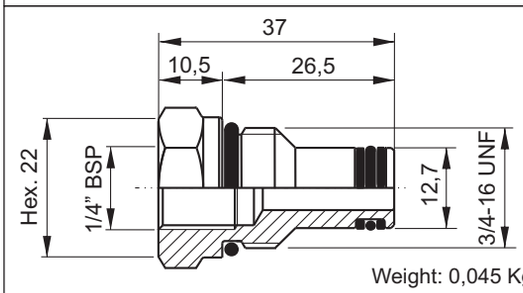 Weight: 0,045 Kg	**Hydraulic symbol** 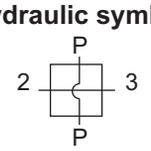 **Spare part code** **E70100006**	**PPC assembly code** **P** **Mounting cavities** 0 1 2 3 4 5 6 7 8
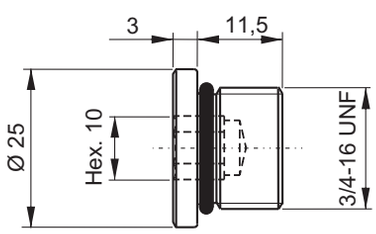 Weight: 0,027 Kg	**Hydraulic symbol** 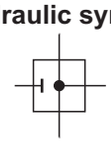 **Spare part code** **E70100004**	**PPC assembly code** **L** **Mounting cavities** 0 1 2 3 4 5 6 7 8
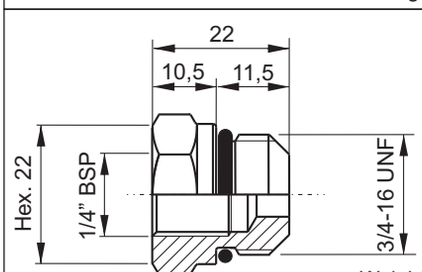 Weight: 0,042 Kg	**Hydraulic symbol** 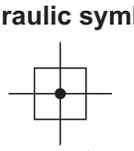 **Spare part code** **E70100002**	**PPC assembly code** **N** **Mounting cavities** 0 1 2 3 4 5 6 7 8
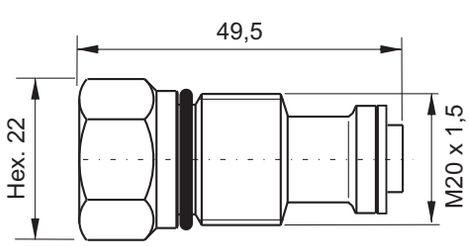 Weight: 0,110 Kg	**Hydraulic symbol** 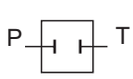 **Spare part code** **E70100010**	**PPC assembly code** **XP** **Mounting cavities** 0 1 2 3 4 5 6 7 8

Note: cavities 3, 4 and 6 are present on central manifold type UB only.

www.hydronit.com
E-mail: sales@hydronit.com
Fax +39 03621841214

G type gear pumps

Group 1:

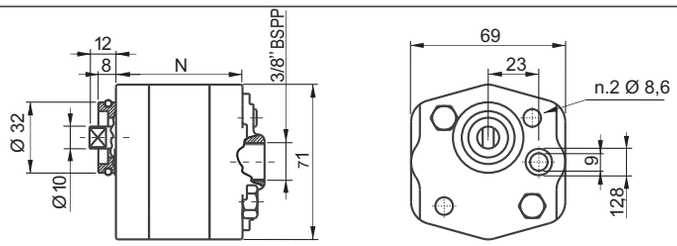

Group 0:

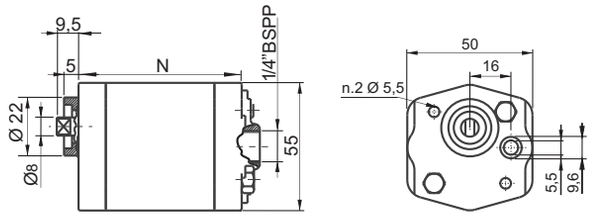

Alluminium adapter flange for group 0
Code: E60513025

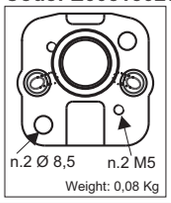

Spare part code

E60 ** 30 **

Pump type:
60 = Group 1
50 = Group 0

Size:
see spare part code on below table

PPC assembly code field

G — **Pump type:** G = G type

1,1 — **Nominal displacement:** (cc/rev) see below table

Available range

Nominal displacement (cc/rev)	Peak pressure (bar)	Intermittent pressure (bar)	Continuous pressure (bar)	Max speed (rpm)	N (mm)	Bolts* (mm)	Code marked on pump	Spare part code	Weight
0,2	230	210	190	7200	45,5	M5x55	UK0,25D24G	E60503002	0,33 Kg
0,4	230	210	190	7200	47,5	M5x55	UK0,25D36G	E60503004	0,35 Kg
0,6	230	210	190	7200	51,5	M5x60	UK0,5D0.75G	E60503006	0,40 Kg
0,8	250	230	210	6000	35,8	M8x50	EK1PD1.2G	E60603001	0,49 Kg
1,1	250	230	210	6000	36,8	M8x50	EK1PD1.6G	E60603002	0,50 Kg
1,3	250	230	210	6000	37,8	M8x50	EK1PD2G	E60603003	0,51 Kg
1,6	250	230	210	6000	38,8	M8x50	EK1PD2.5G	E60603035	0,52 Kg
2,1	250	230	210	6000	40,3	M8x55	EK1PD3.3G	E60603004	0,54 Kg
2,6	250	230	210	6000	42,3	M8x55	EK1PD4.2G	E60603005	0,56 Kg
3,2	250	230	210	5000	43,8	M8x55	EK1PD5G	E60603006	0,58 Kg
3,7	250	230	210	4500	45,8	M8x60	EK1PD5.8G	E60603007	0,61 Kg
4,2	250	230	210	4000	47,3	M8x60	EK1PD6.7G	E60603008	0,63 Kg
4,9	250	230	210	3500	49,3	M8x60	EK1PD7.5G	E60603009	0,65 Kg
6,0	230	210	190	3000	80,1	M8x90	EK1PD9.2G	E60603010	1,01 Kg
7,9	200	180	160	2100	88,0	M8x100	K1PD11.5G	E60603012	1,12 Kg
9,8	170	150	130	1700	98,3	M8x110	K1PD14.5G	E60603014	1,27 Kg

* A proper washer is to be forecast to adapt bolt lenght

Main features

Oil temperature	-15 ÷ +80 °C
Inlet pressure	0,7 < P < 3,0 bar (absolute pressure)
Fixing bolts	2 x M8 8.8 class steel tightening torque: 25 Nm
Pressure definition	Peak pressure: cycle 2 s ON Intermittent pressure: cycle 20 s ON Continuous pressure: cycle always ON
Filtration setting	25 ÷ 50 µ

Standard rotation direction: clockwise rotation (from shaft side).
Counterclockwise rotation pumps can be mounted on request.
Ask our sales department.

www.hydronit.com
E-mail: sales@hydronit.com
Fax +39 03621841214

K type gear pumps

Group 1:

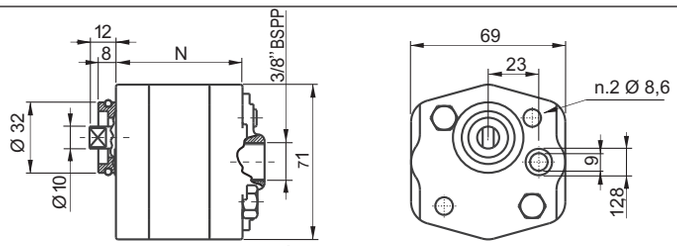

Group 0:

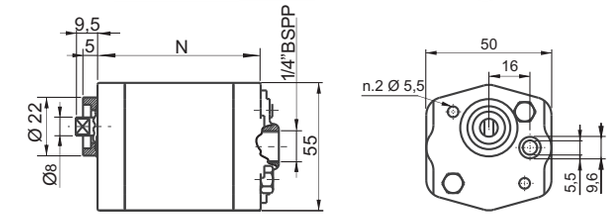

Alluminium adapter flange for group 0
Code: E60513025

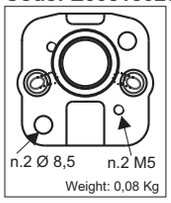

Spare part code

E60 ** 40 **

Pump type:
60 = Group 1
50 = Group 0

Size:
see spare part code on below table

PPC assembly code field

K — **Pump type:** K = K type

1,2 — **Nominal displacement:** (cc/rev) see below table

Available range

Nominal Displacement (cc/rev)	Peak pressure (bar)	Intermittent pressure (bar)	Continuous pressure (bar)	Max speed (rpm)	N (mm)	Bolts* (mm)	Spare part code	Weight
0,2	200	180	160	6000	45,5	M5x55	E60504002	0,33 Kg
0,4	200	180	160	6000	47,5	M5x55	E60504004	0,35 Kg
0,6	200	180	160	6000	51,5	M5x60	E60504006	0,40 Kg
0,9	280	240	200	4500	60	M8x75	E60604001	0,73 Kg
1,2	280	240	200	4500	61	M8x75	E60604002	0,75 Kg
1,6	280	240	200	4500	63	M8x80	E60604035	0,77 Kg
2,1	280	240	200	4500	65	M8x80	E60604004	0,79 Kg
2,7	280	240	200	4500	66	M8x80	E60604005	0,82 Kg
3,2	280	240	200	4500	70	M8x85	E60604006	0,86 Kg
3,7	260	220	180	4000	72	M8x85	E60604007	0,88 Kg
4,2	260	220	180	4000	74	M8x90	E60604008	0,90 Kg
5,0	230	180	140	3500	76	M8x90	E60604009	0,94 Kg
6,0	230	180	140	3000	80	M8x100	E60604010	0,98 Kg
7,9	210	160	140	3000	90	M8x110	E60604012	1,10 Kg

Other pumps executions with different pressure/speed ratings are available on request.

* A proper washer is to be forecast to adapt bolt lenght

Main features

Oil temperature	-15 ÷ +80 °C
Inlet pressure	0,7 < P < 3,0 bar (absolute pressure)
Fixing bolts	2 x M8 8.8 class steel tightening torque: 25 Nm
Pressure definition	Peak pressure: cycle 2 s ON Intermittent pressure: cycle 20 s ON Continuous pressure: cycle always ON
Filtration setting	25 ÷ 50 µ

Standard rotation direction: clockwise rotation (from shaft side).
Counterclockwise rotation pumps can be mounted on request.
Ask our sales department.

www.hydronit.com
E-mail: sales@hydronit.com
Fax +39 03621841214

H type high pressure gear pumps

Group 1:

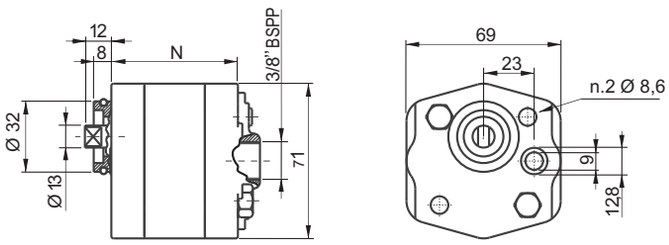

Spare part code

E60 60 50 **

Size:
see spare part code on below table

PPC assembly code field

H — **Pump type:**
H = H type

1,2 — **Nominal displacement:**
(cc/rev) see below table

Available range

Nominal Displacement (cc/rev)	Peak pressure (bar)	Intermittent pressure (bar)	Continuous pressure (bar)	Max speed (rpm)	N (mm)	Bolts* (mm)	Spare part code	Weight
1,2	320	300	280	5000	40	M8x55	E60605002	0,5 Kg
1,7	320	300	280	4500	41	M8x55	E60605035	0,52 Kg
2,2	320	300	280	4500	44	M8x55	E60605004	0,54 Kg
2,6	320	300	280	4500	46	M8x60	E60605005	0,56 Kg
3,2	320	300	280	4000	52	M8x65	E60605006	0,58 Kg
3,8	300	280	250	3800	55	M8x70	E60605007	0,61 Kg
4,2	280	260	250	3500	82	M8x95	E60605008	1,05 Kg
4,7	280	260	240	3200	84	M8x100	E60605009	1,12 Kg
6,0	250	230	210	3000	94	M8x110	E60605010	1,22 Kg

Other pumps executions with different pressure/speed ratings are available on request.

* Proper washers are to be forecast to adapt bolt lenght

Main features

Oil temperature	-15 ÷ +80 °C
Inlet pressure	0,7 < P < 3,0 bar (absolute pressure)
Fixing bolts	2 x M8 8.8 class steel tightening torque: 25 Nm
Pressure definition	Peak pressure: cycle 2 s ON Intermittent pressure: cycle 20 s ON Continuous pressure: cycle always ON
Filtration setting	25 ÷ 50 µ
Standard rotation direction: clockwise rotation (from shaft side). Counterclockwise rotation pumps can be mounted on request. Ask our sales department.	

www.hydronit.com
E-mail: sales@hydronit.com
Fax +39 03621841214

Bidirectional gear pumps

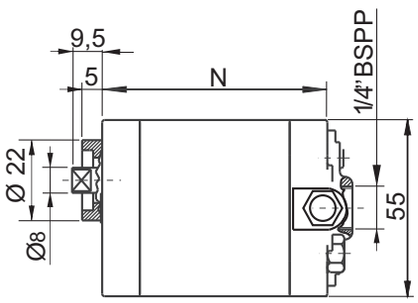

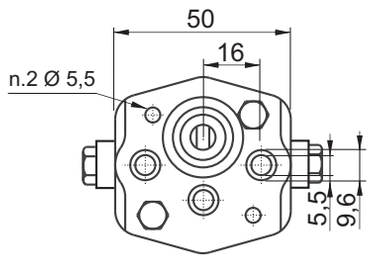

Alluminium adapter flange
Code: E60513025

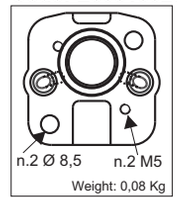

Spare part code

E605045 **

Size:
see spare part code
on below table

PPC assembly code field

R — **Pump type:**
R = Reversible type

1,1 — **Nominal displacement:**
(cc/rev) see below table

Available range

Nominal Displacement (cc/rev)	Peak pressure (bar)	Intermittent pressure (bar)	Continuous pressure (bar)	Max speed (rpm)	N (mm)	Bolts* (mm)	Spare part code	Weight
0,2	200	180	160	6000	45,5	M5x55	E60504502	0,46 Kg
0,4	200	180	160	6000	47,5	M5x55	E60504504	0,48 Kg
0,6	200	180	160	6000	54,5	M5x60	E60504506	0,49 Kg
0,9	200	180	160	5000	62,4	M5x60	E60504509	0,50 Kg
1,3	200	180	160	3900	63,2	M5x65	E60504513	0,51 Kg
1,5	200	180	160	3900	64,5	M5x65	E60504515	0,52 Kg

* A proper washer is to be forecast to adapt bolt lenght
For higher displacement please ask to our technical department

Main features

Oil temperature	-15 ÷ +80 °C
Inlet pressure	0,7 < P < 3,0 bar (absolute pressure)
Fixing bolts	2 x M8 8.8 class steel tightening torque: 25 Nm
Pressure definition	Peak pressure: cycle 2 s ON Intermittent pressure: cycle 20 s ON Continuous pressure: cycle always ON
Filtration setting	25 ÷ 50 µ

www.hydronit.com
E-mail: sales@hydronit.com
Fax +39 03621841214

Double gear pumps

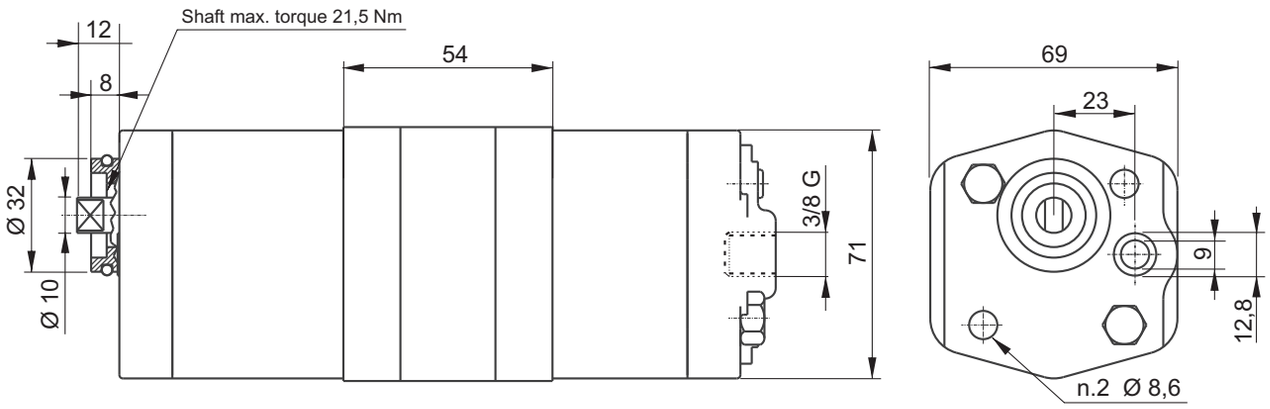

Commune 3/8'' BSPP inlet port (on the rear cover) alternatively individual inlet side ports are available

PPC assembly code field

G — **Pump type:**
G = G type
K = K type

1,1 — **Displacement 1st section:**
see U040.20.18 - 19 table

+

2,1 — **Displacement 2nd section:**
see U040.20.18 - 19 table

HL — **Option:**
Hi - Lo execution

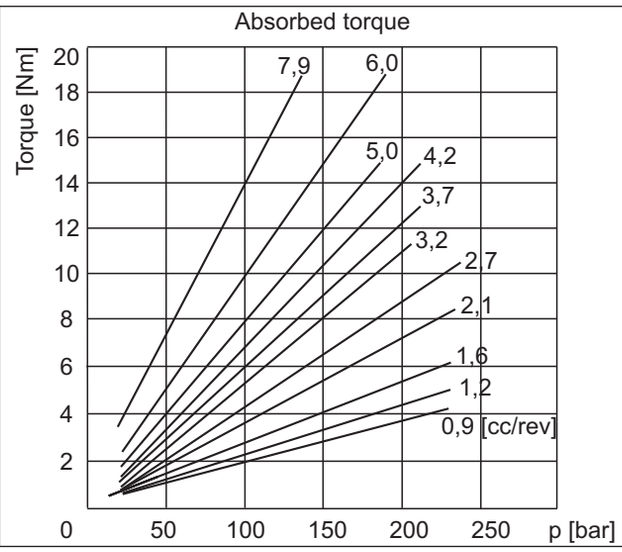

Standard combinations available

Type	Nominal Displacement (cc/rev)	Peak pressure (bar)	Intermittent pressure (bar)	Continuous pressure (bar)	Unloading pressure (bar)	Max speed (rpm)	Spare part code	Weight
K0,9+3,2HL	0,9 + 3,2	250	230	210	42±5	1750	E60600932HL	2,12 Kg
K2,1+6,0HL	2,1 + 6,0	250	230	210	42±5	1750	E60602160HL	2,29 Kg

PUMPS CHOICE DIMENSIONING:

- Check that the power absorption of the front element is equal or higher than the rear one
- Element performance and features are the same as the elements of corresponding single pumps (see table in U040.20.18 - 19 sections)
- Double pump maximum rotation speed is determined by the lowest speed among maximum rotation speeds of each single element
- Torque applied on the shaft of the first element is the addition of the torques absorbed by the two pumps (see above diagram); this value must never go over the limit value allowed for the shaft (21,5 Nm).

HI-LO

It's an efficient and energy saving solution for applications where you need a fast approach and an high pressure working phase (industrial presses, garbage compactors,..).
During the high speed phase both pumps are supplying flow to the system while during the high pressure phase, the high flow pump is discharged back to tank with no load.
This solution can be conveniently realized with our UA or UB or U4 central manifold without any additional kit. Ask to our technical office for more details.

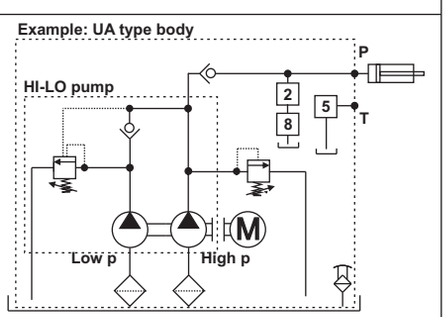

www.hydronit.com
E-mail: sales@hydronit.com
Fax +39 03621841214

Helical rotor pumps for high pressure, high flow and low noise applications

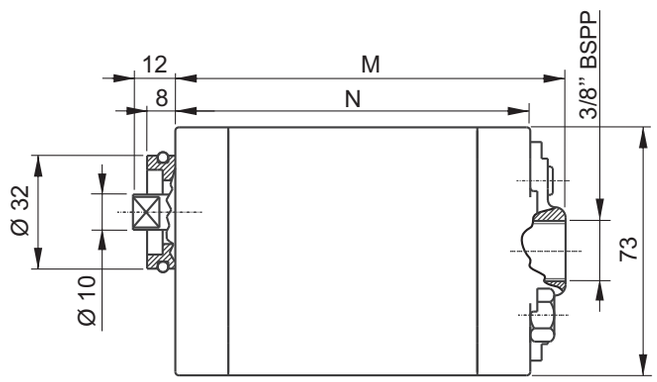

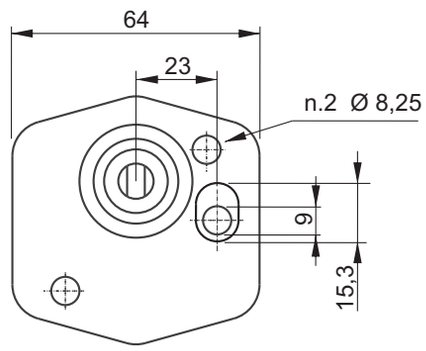

Available range

PPC code	Displacement (cc/rev)	Peak pressure (bar)	Intermittent pressure (bar)	Continuous pressure (bar)	Max speed (rpm)	N (mm)	M (mm)	Noise level (dbA)	Spare part code
S6,4	6,4	250	230	200	3600	93	100	55	S60603010
S8,3	8,3	215	195	153	3600	98	105	55	S60603012
S10	10,2	190	170	126	3600	103	110	55	S60603014
S13	12,9	160	140	99	3600	110	117	55	S60603016

Main features

Oil temperature range	-15 ÷ +80 °C
Inlet pressure	0,8 < P < 2,0 bar (absolute pressure)
Weight	2 ÷ 2,5 Kg
Filtration setting	30 ÷ 50 µ
Fixing bolts	2 x M8 (8.8 class steel) tightening torque: 25 Nm
Pressure definition	Peak pressure: cycle 1 sec. & 3 sec. OFF Intermittent pressure: cycle 20 sec. ON & 3 sec. OFF Continuous pressure: cycle always ON

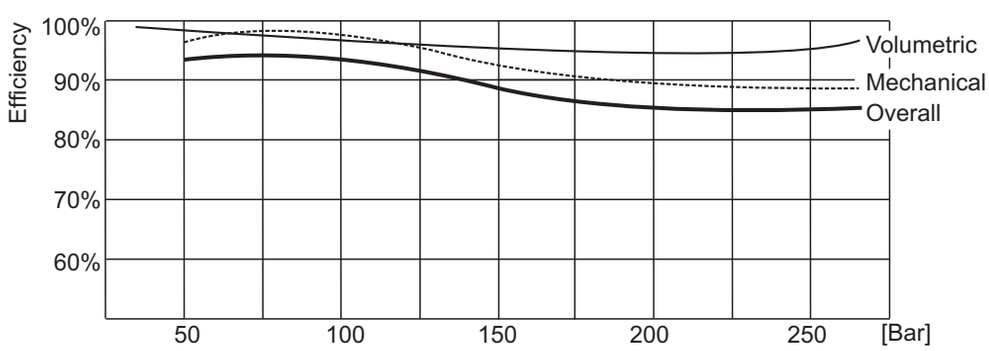

Note: Reference values measured at 1500 rpm with an oil viscosity of 46 cSt at 40 °C.

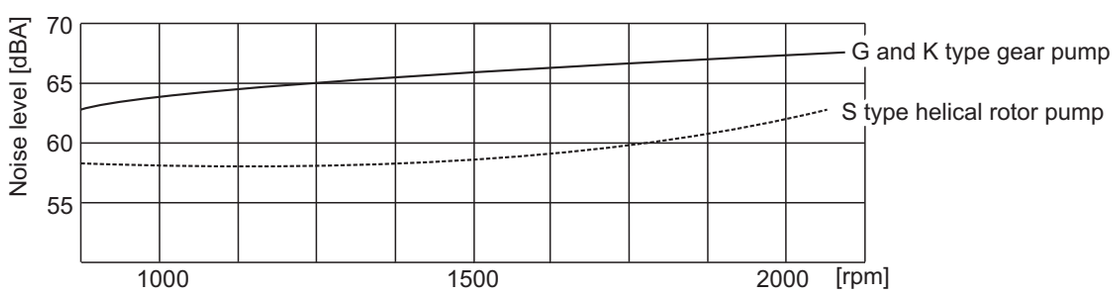

Note: Reference values measured in air at 1500 rpm with an oil viscosity of 46 cSt at 40 °C.

Section 30
ADDITIONAL MANIFOLDS AND COMPONENTS

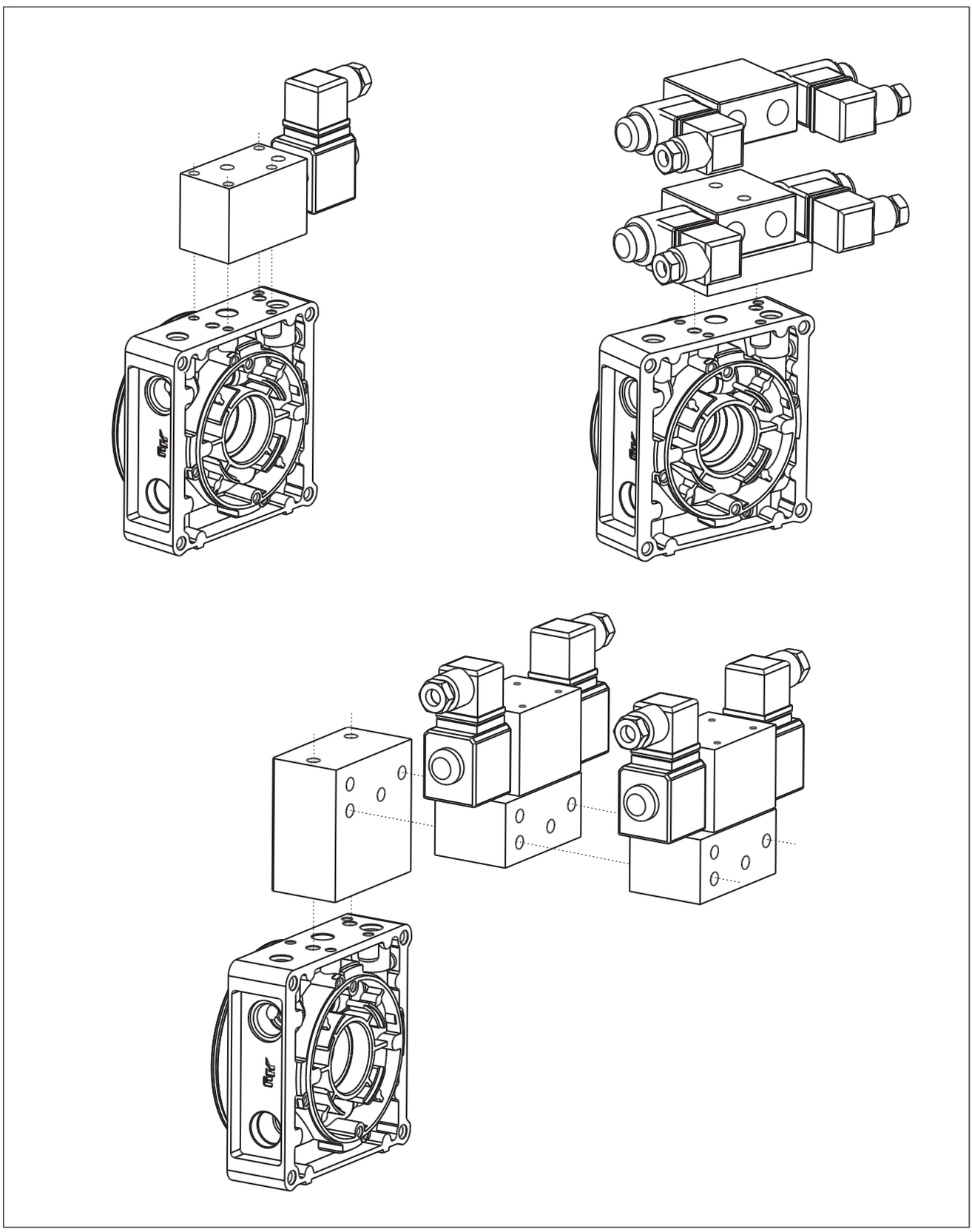

www.hydronit.com
E-mail: sales@hydronit.com
Fax +39 03621841214

Cetop 3 modular manifolds

Rear ports

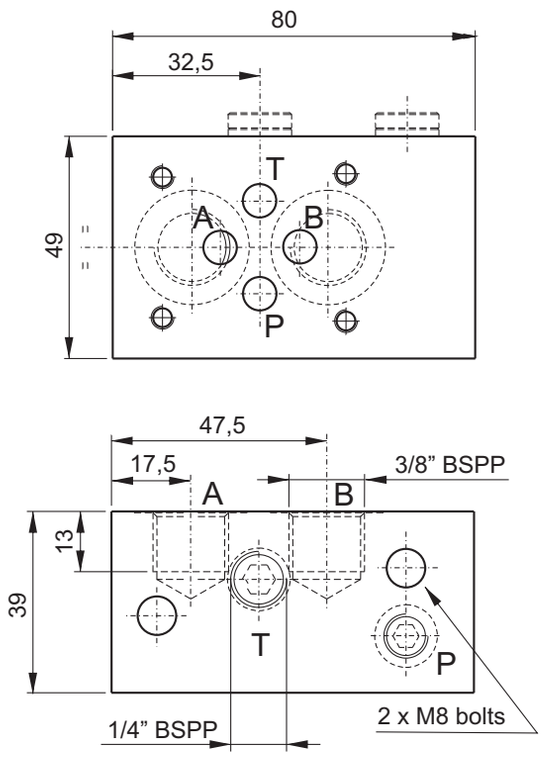

Weight: 0,37 kg
Fixing system: 2xM8 tie-rods steel class 8.8 or above

Lateral ports

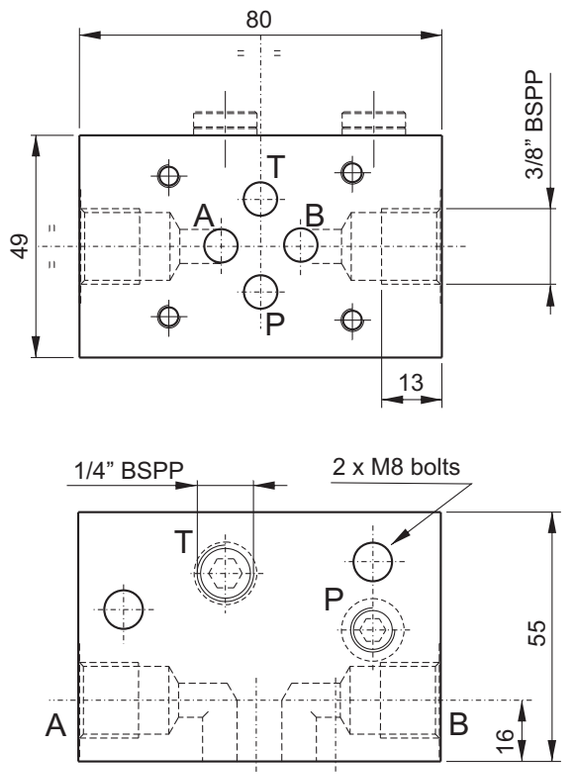

Weight: 0,56 kg
Fixing system: 2xM8 tie-rods steel class 8.8 or above

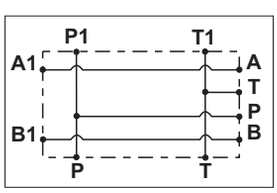

Parallel connection	Spare part code
Rear ports	E60403001
Lateral ports	E60403010

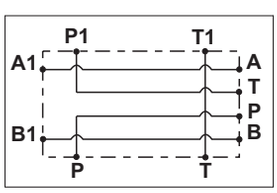

Serial connection	Spare part code
Lateral ports	E60403011

Option P port:
P port for modular blocks

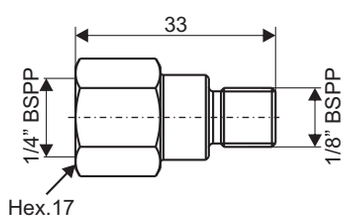

Note: to add external manifolds to PPC assembly code, just add their spare part codes at the end of PPC code. Ex: PPC-0,8 12DC-UA-J-G1,1-D/280-G-1,5L+**E60403004**+**E60403010**

The Cetop attachment is on motor side. With AC motor frames bigger than 71, always add a spacer manifold E60403004 (see next page) below the Cetop manifold to avoid interference between the Cetop valve and the motor.

Recommended tightening torque for M8 bolts: 16 Nm

www.hydronit.com
E-mail: sales@hydronit.com
Fax +39 03621841214

Cetop 3 modular manifolds with integral pilot operated check valves

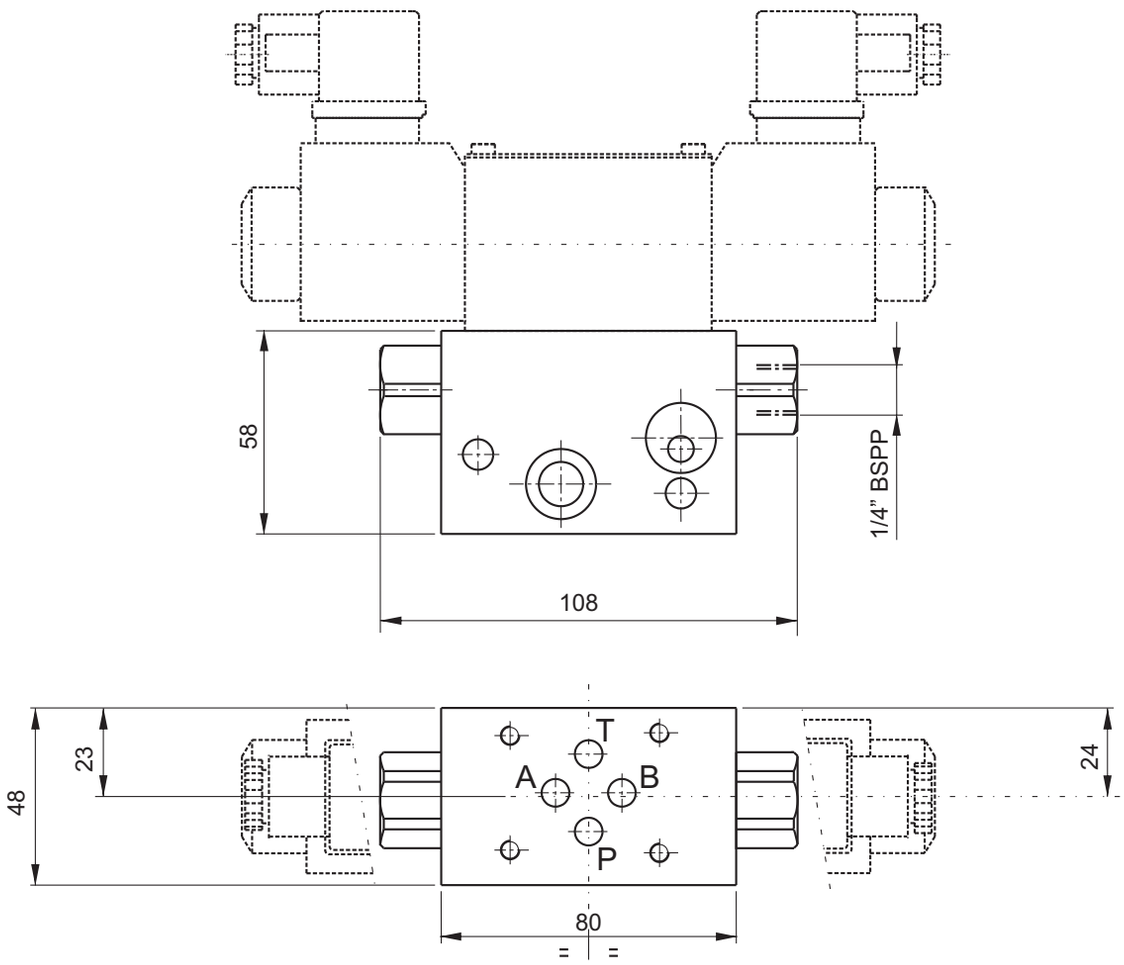

Weight: 0,71 kg
Fixing system: 2xM8 tie-rods steel class 8.8 or above

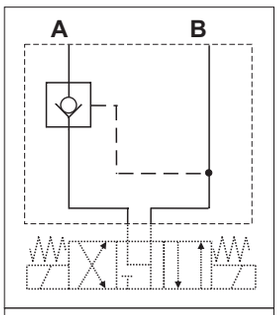

Spare part code
E60413002

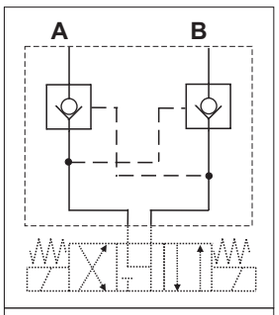

Spare part code
E60413001

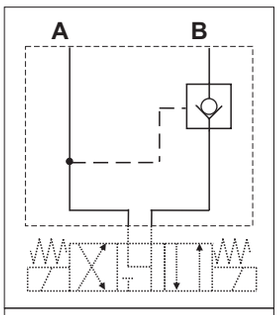

Spare part code
E60413003

Notes: code does not include the Cetop solenoid valve.
Recommended tightening torque for M8 bolts: 16 Nm

www.hydronit.com
E-mail: sales@hydronit.com
Fax +39 03621841214

Cetop 3 sandwich relief valves

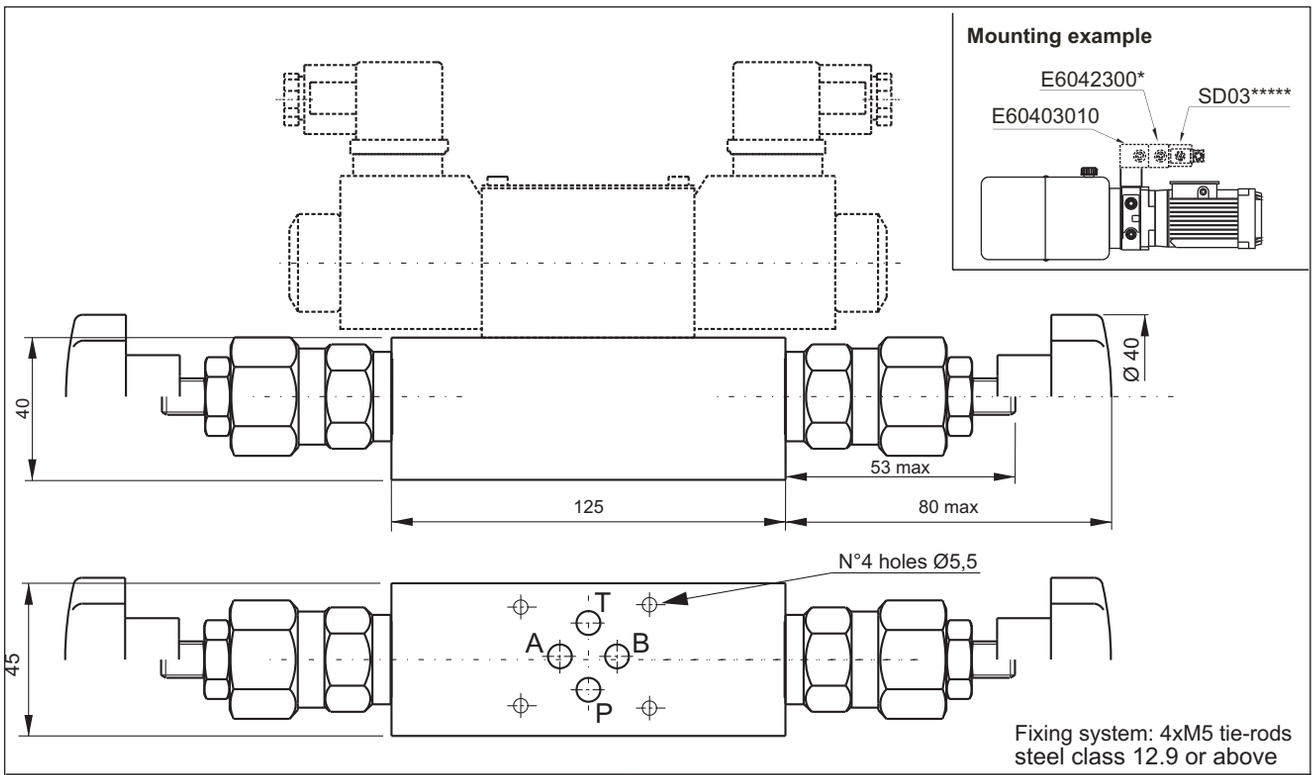

E6042300* — **Cetop3 sandwich relief valve**

B — **Pressure range settings:**
L = 10 ÷ 60 bar
A = 20 ÷ 180 bar
B = 35 ÷ 280 bar

1 — **Option:**
1 = screw (std)
2 = handwheel
3 = with cap
4 = plastic seal

Main features

Max pressure	350 bar
Max flow	35 l/min
Weight	Single relief: 0,71 kg Double relief: 0,87 kg

Recommended filtration settings: 25 ÷ 50 µ
Oil temperature: -30 ÷ + 80 °C

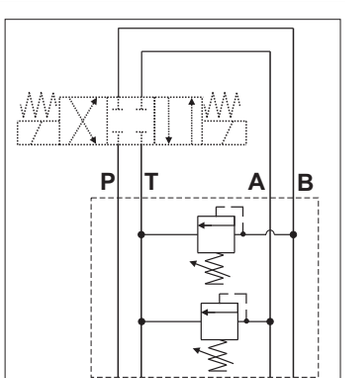

Spare part code
E60423001**

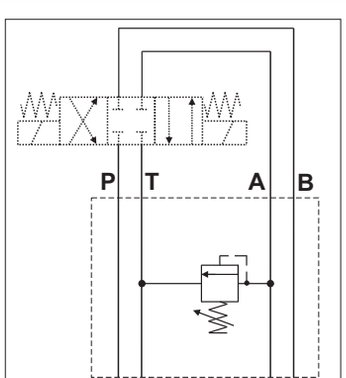

Spare part code
E60423002**

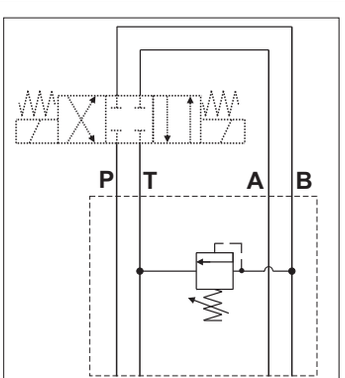

Spare part code
E60423003**

Notes: code does not include the Cetop solenoid valve. When E60423001 relief valves have different pressure ranges, please specify them separately.
Es: E60423001AB=180 bar max for valve on A port, 280bar max for valve on B one.

www.hydronit.com
E-mail: sales@hydronit.com
Fax +39 03621841214

Cetop 3 sandwich flow control valves

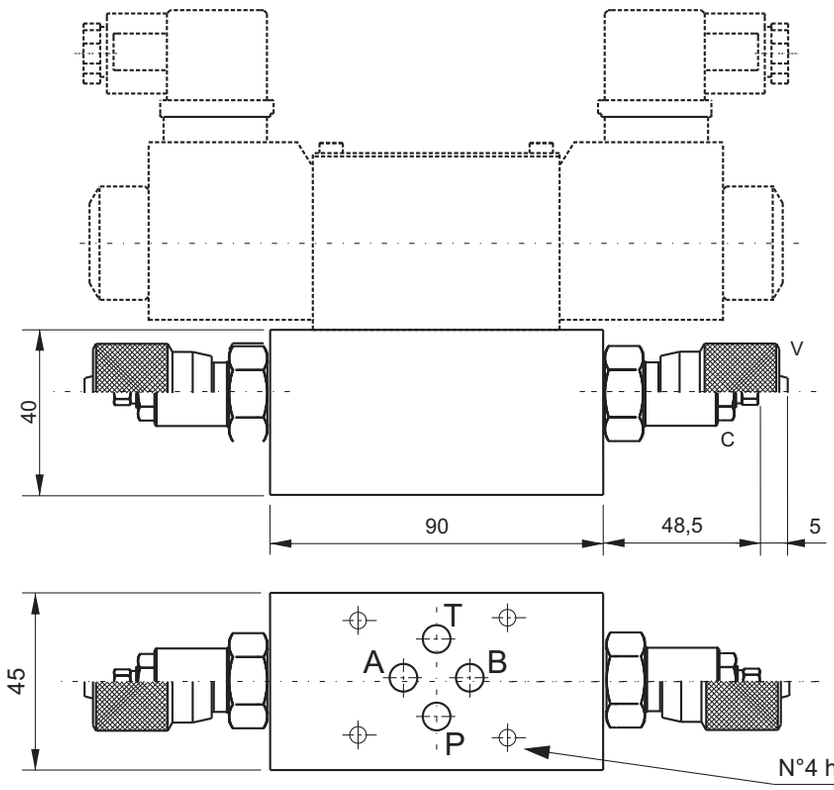

Mounting example

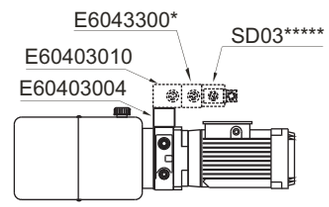

Fixing system: 4xM5 tie-rods steel class 12.9 or above

E60433001 — **Cetop3 sandwich meter-out flow control valve**

C — **Adjusting device:**
C = screw (std)
V = handwheel

Main features

Max pressure	300 bar
Max flow	15 l/min
Weight	Single control: 0,52 kg Double control: 0,64 kg

Recommended filtration settings: 25 ÷ 50 µ
Oil temperature: -30 ÷ + 80 °C

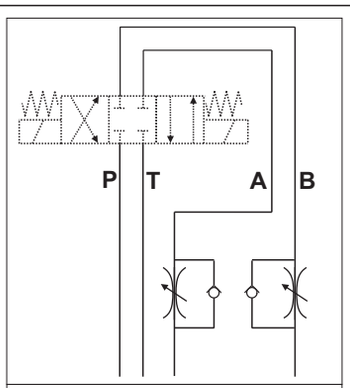

Spare part code
E60433001*

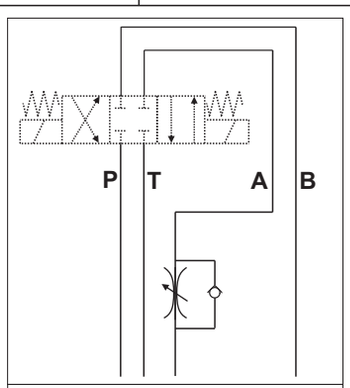

Spare part code
E60433002*

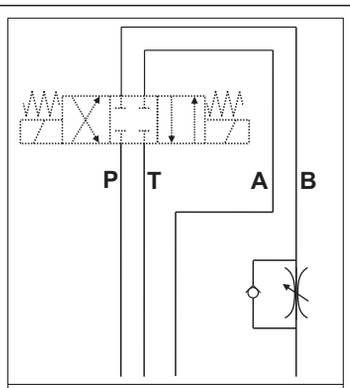

Spare part code
E60433003*

Notes: code does not include the Cetop solenoid valve.

www.hydronit.com
E-mail: sales@hydronit.com
Fax +39 03621841214

Cetop 3 directional solenoid valves

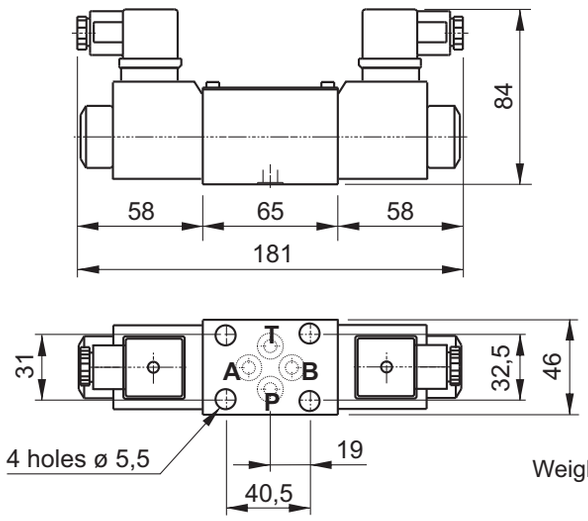

Weight: 1,43 kg (2 sol), 1,16 kg (1 sol)

Spare part code

SD03	**Cetop 3 directional solenoid valve**
A2	**Spool and scheme:** see side table
24DC	**Supply voltage:** see below table
-	**Options:** - = std

Code	
	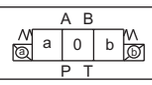

Double solenoid

A2*	
B2	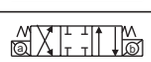
C2	
E2	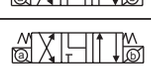

Single solenoid

A11C	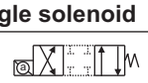

* = spools with price addition
Other spools are avaiable on request

Supply voltage (V)	Coil voltage	Spare coil code	Spare connector code	Holding power consumption
12DC	12DC	M16040001	KA132000B1	26W
24DC	24DC	M16040002	KA132000B1	26W
24AC/50 Hz 60 Hz	24DC	M16040002	KA132R11B1	26W
115AC/50 Hz 60 Hz	110RC	M16040004	KA132R12B1	26W
230AC/50 Hz 60 Hz	220RC	M16040005	KA132R13B1	26W

Other voltages and electric connectors types (Amp Junior, flying leads,...) available on request.
Inrush power consumption can be up to 3,5 times higher than the holding one.

Max pressure	250 bar
Max p on T port	210 bar static, 180 bar dynamic
Max flow	40 l/min
Fixing bolts	4 TCEI M5x30. 5Nm torque 10.9 class steel or better
Coil insulation	Class H
Electric connection	DIN 43650-A / ISO 4400
Protection class	IP 65 / DIN 40050
Duty cycle	ED 100%
Voltage required	+/- 10% nominal voltage
Manual override	included as standard
Normatives	EN50081-1 / EN50082-2 (89/336 CEE electromagnetic comp.) 73/23/CEE / 96/68/CEE (low voltage)

www.hydronit.com
E-mail: sales@hydronit.com
Fax +39 03621841214

Cetop 3 directional manual valves

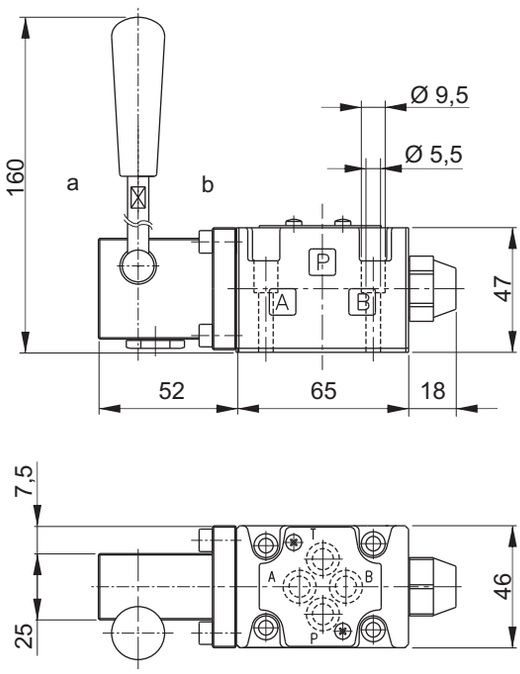

Weight: 1,32 kg

Spare part code

HD03	**Cetop 3 directional manual control valve**
A	**Spool control:** see side table
1	**Spool type:** see side table
-	**Options:** - = std

Code	A B / a 0 b / P T

Spool type

1	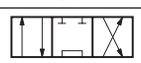
2	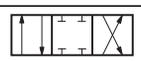
3	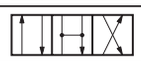
10	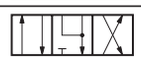

Spool control

Spring centered	**A**	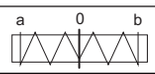
Detented	**D**	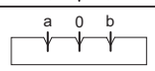

Max pressure	350 bar
Max p on T port	150 bar
Max flow	30 l/min
Fixing bolts	4 TCEI M5x30. 5Nm torque 10.9 class steel or better
Temperature range	-20 ÷ +80°C
Recommended filtration	25 ÷ 50 µ

www.hydronit.com
E-mail: sales@hydronit.com
Fax +39 03621841214

Stackable directional solenoid valves

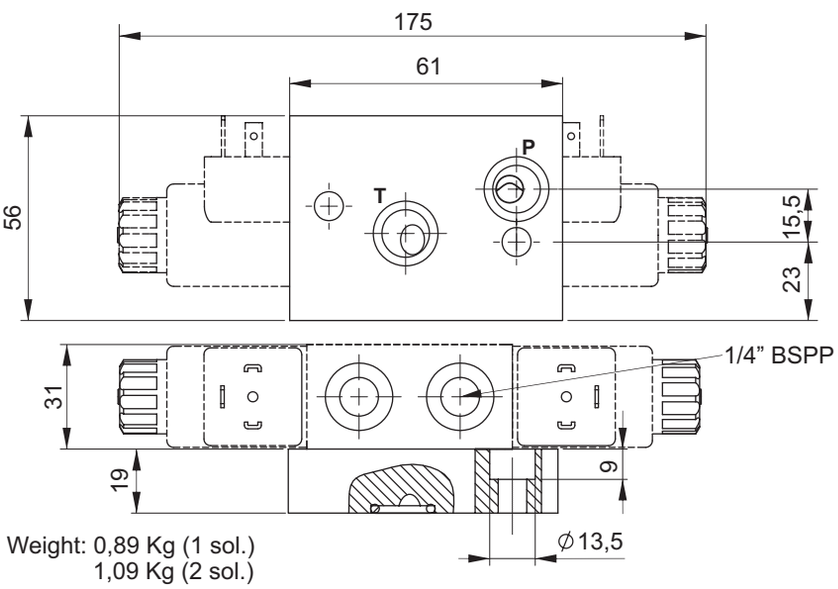

Weight: 0,89 Kg (1 sol.)
1,09 Kg (2 sol.)

Fixing system: 3xM6 tie-rods

Mounting manifold

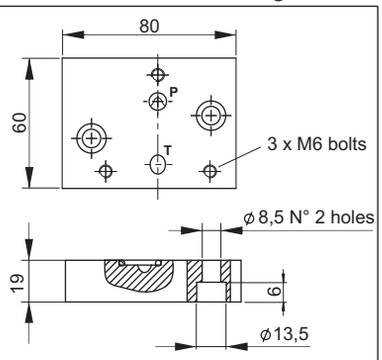

Spare part code: **E60403006**

Mounting bolts 2 x M8x20
Weight: 0,22 Kg

Spare part code

SD01	**Stackable directional solenoid valve**
A2	**Spool and scheme:** see side table
24DC	**Supply voltage:** see below table
-	**Position type:** - = intermediate C = top closed

Code	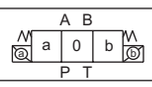

Double solenoid

A2*	
B2	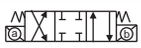
C2	
E2	

Single solenoid

A11C	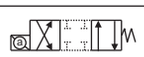

* = spools with price additional
Other spools available on request

Supply voltage (V)	Coil voltage	Spare coil code	Spare connector code	Holding power consumption
12DC	12DC	M12040001	KA132000B1	22W
24DC	24DC	M12040002	KA132000B1	22W
24AC/50 Hz 60 Hz	24DC	M12040002	KA132R11B1	22W
230AC/50 Hz 60 Hz	220RC	M12040005	KA132R13B1	22W

Other voltages and electric connectors types (Amp Junior, flying leads,...) available on request.
Inrush power consumption can be up to 3,5 times higher than the holding one.

Max pressure	250 bar
Max p on T port	210 bar static, 140 bar dynamic
Max flow	20 l/min
Fixing bolts	3 TCEI M6 x 6Nm torque. 10.9 class steel
Coil insulation	Class H
Electric connection	DIN 43650-A / ISO 4400
Protection class	IP 65 / DIN 40050
Duty cycle	ED 100%
Voltage required	+/- 10% nominal voltage
Manual override	included as standard
Normatives	EN50081-1 / EN50082-2 (89/336 CEE electromagnetic comp.) 73/23/CEE / 96/68/CEE (low voltage)

www.hydronit.com
E-mail: sales@hydronit.com
Fax +39 03621841214

PM09 hand pump modular manifold

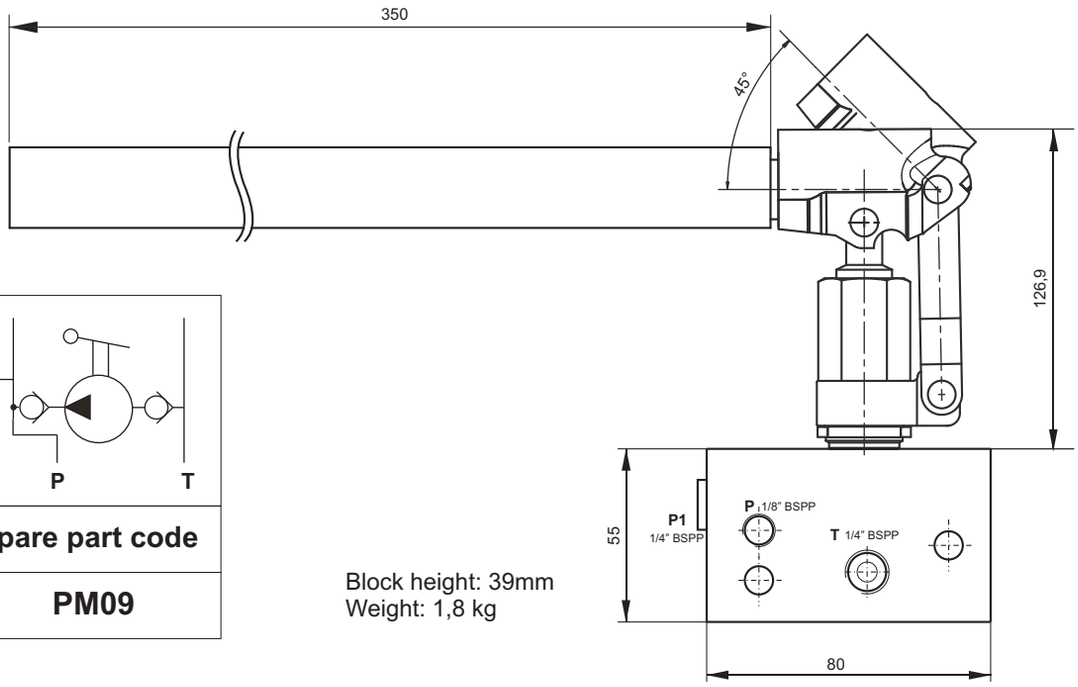

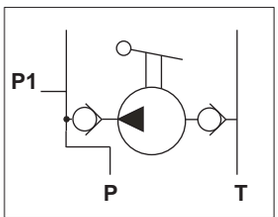

Spare part code
PM09

Block height: 39mm
Weight: 1,8 kg

Fixing system: 2xM8 tie-rods
Material class: min. 8.8 or equivalent

Mounting example

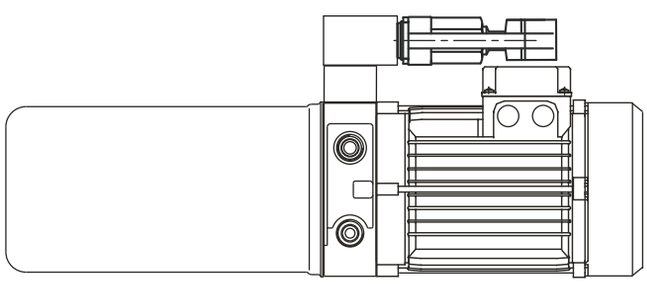

Max pressure	210 bar
Displacement	8,8 cc/stroke
Fixing bolts	2 x M8 (8.8 class steel)
Filtration grade	25 ÷ 50 µ
Temperature range	-20 ÷ +70°C

Recommended tightening torque for M8 bolts: 16 Nm.

Commisioning: the pump must be bled by opening the plug of the unused pressure port (P o P1), pumping a few times until oil comes out, then tightening the plug again.

www.hydronit.com
E-mail: sales@hydronit.com
Fax +39 03621841214

Modular manifold with pilot operated check valves

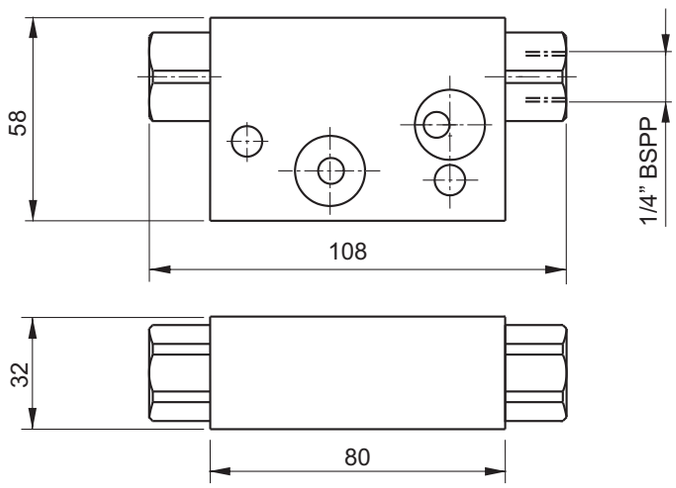

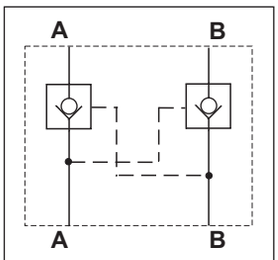

Spare part code
E60403027

Suitable for:
U4 body
UR body

Weight: 0,5 kg

Fixing system: 2xM8 tie-rods
steel class 8.8 or above

Notes: Recommended tightening torque for M8 bolts: 16 Nm

Modular manifold with check valve for differential area cylinder

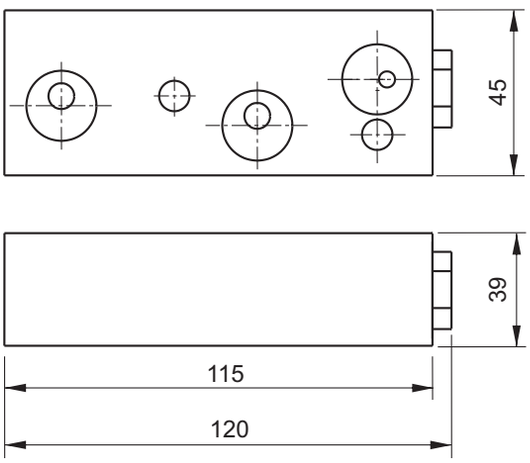

Weight: 0,5 kg

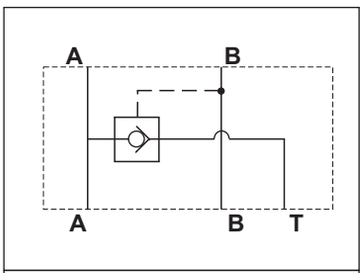

Spare part code
E60403028

Suitable for: UR body with differential cylinders
Fixing system: 2xM8 tie-rods
steel class 8.8 or above

Notes: Recommended tightening torque for M8 bolts: 16 Nm

www.hydronit.com
E-mail: sales@hydronit.com
Fax +39 03621841214

Other modular manifolds

Spacer element

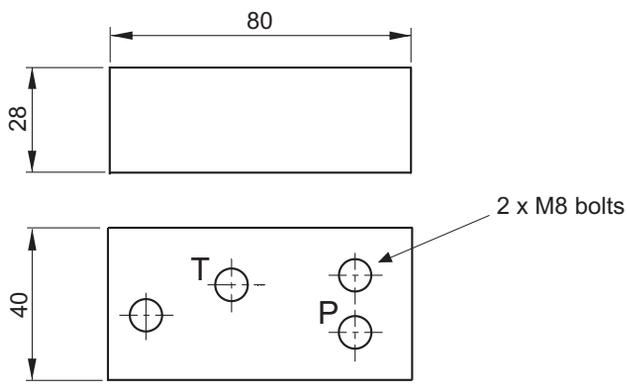

Suitable for: all central manifolds with AC motors with frame bigger than 71 and DC motors with frame bigger than Ø125.

Weight: 0,23 kg

Fixing system: 2xM8 tie-rods steel class 8.8 or above

Mounting example

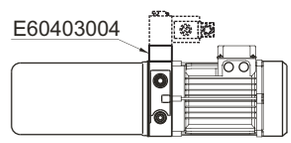

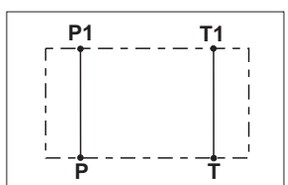

Spare part code
E60403004

90° rotation manifold

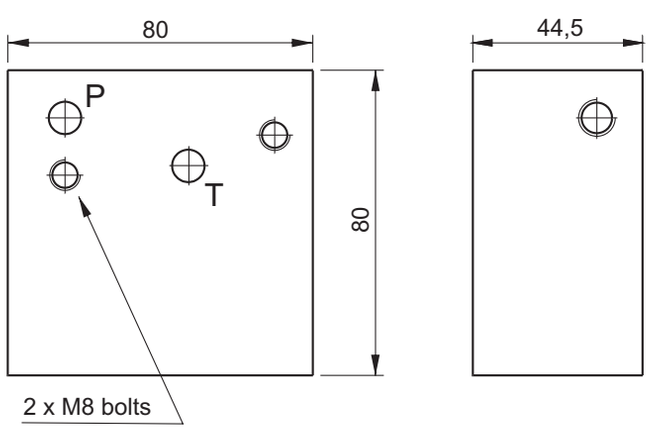

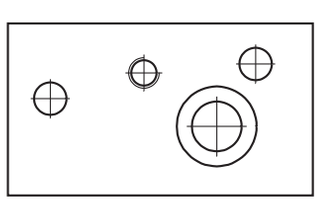

Weight: 0,72 kg

Fixing system: 2xM8 tie-rods steel class 8.8 or above

Mounting example

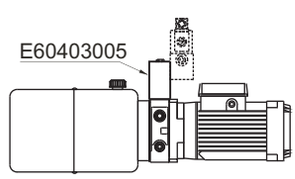

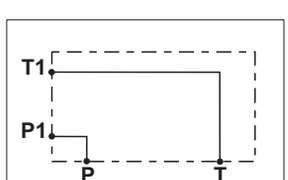

Spare part code
E60403005

www.hydronit.com
E-mail: sales@hydronit.com
Fax +39 03621841214

Modular manifolds for 3/4-16 UNF cartridges

Two way

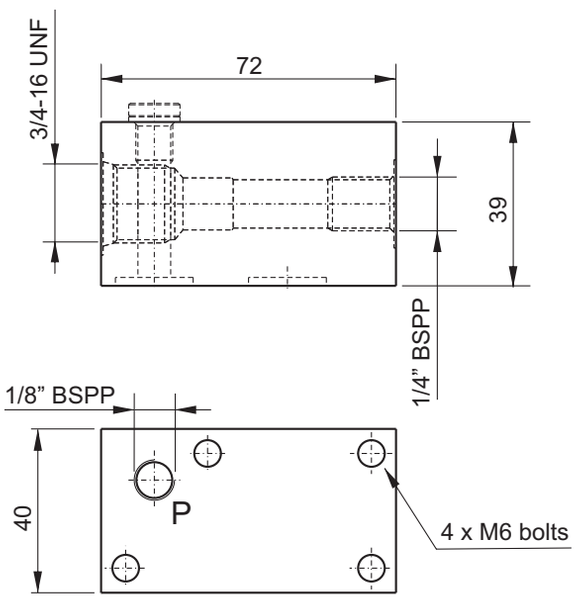

Circuit example

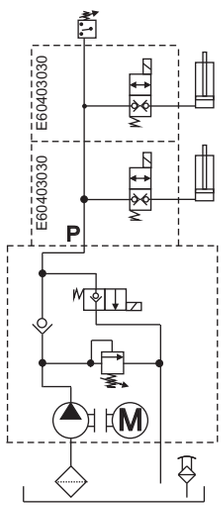

Weight: 0,26 kg
Fixing system: 4xM6 tie-rods steel class 8.8 or above

Mounting example

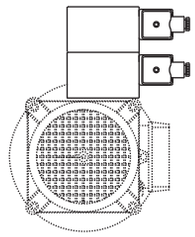

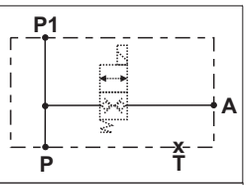

Spare part code

E60403030

Note: code does not include the MSV or MDV solenoid valve.

Recommended tightening torque for M6 bolts: 8 Nm

Three way

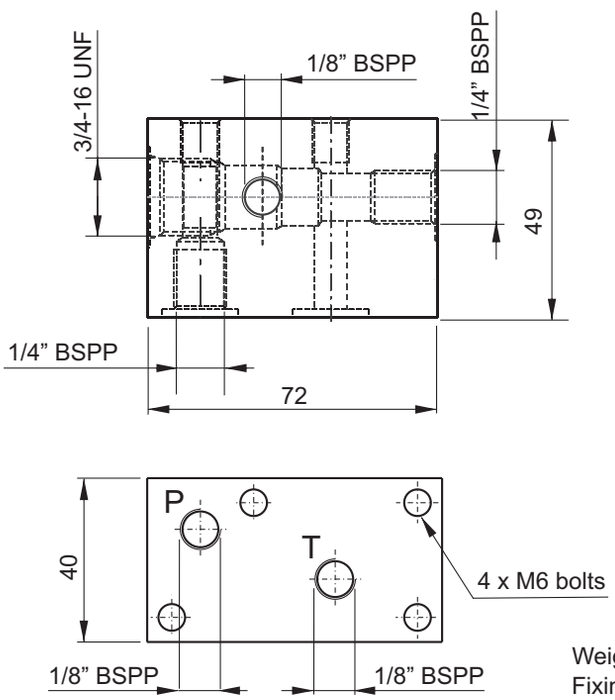

Circuit example

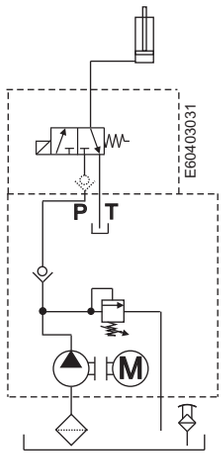

Weight: 0,32 kg
Fixing system: 4xM6 tie-rods steel class 8.8 or above

Mounting example

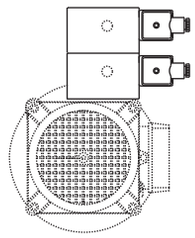

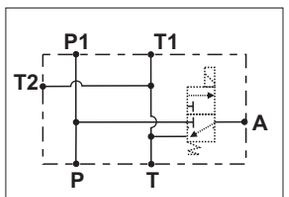

Spare part code

E60403031

Note: code does not include the MSV3V solenoid valve.

Recommended tightening torque for M6 bolts: 8 Nm

Note: 3/4-16 UNF manifolds can be stacked one upon the other but cannot be used with cetop 3 modular manifolds since the tie rods bolt pattern is different. The three way block is not compatible with square vertical tanks.

www.hydronit.com
E-mail: sales@hydronit.com
Fax +39 03621841214

MSV3V - Direct operated 3/2 way directional spool solenoid valve

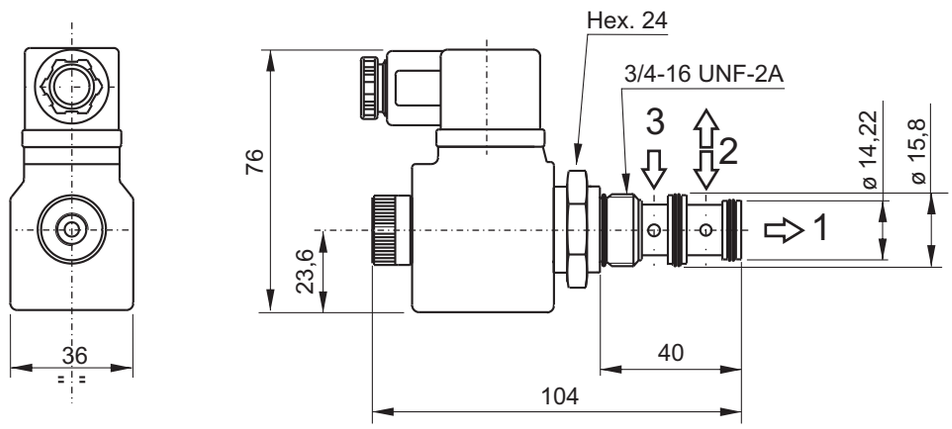

Spare part code

MSV3V — **Three-way pilot operated solenoid valve**

40 — **Spool type:**
40 = std

0 — **Options:**
0 = no options (std)
E = emergency

0000 — **Supply voltage:**
0000 = no coil (std)
see below table

Hydraulic symbol

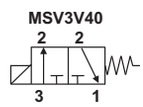

Main features

Max pressure	210 bar
Max flow	12 l/min (20 l/min with no block)
Weight	0,35 Kg (with coil)
Coil thermal insulation	Class H
Electric connector	DIN 43650-A/ISO 4400
Coil protection class	IP 65/DIN 40050
Duty cycle	ED 100 %
Voltage required	+/- 10% nominal voltage
Recommended tightening torque	30 Nm
Oil temperature	-25 ÷ +70°C

Coils selection

Supply voltage (V)	Coil type	Spare coil code	Spare connector code	Holding power consumption
12DC	12DC	M14040001	KA132000B1	22W
24DC	24DC	M14040002	KA132000B1	22W
24AC/50 Hz 60 Hz	24DC	M14040002	KA132R11B1	22W
115AC/50 Hz 60 Hz	110RC	M14040004	KA132R12B1	22W
230AC/50 Hz 60 Hz	220RC	M14040005	KA132R13B1	22W

Other voltages and electric connectors types (AMP JUNIOR,flying leads,...) are available on request.
Inrush power consumption can be up to 3,5 times higher than the holding one.

Pressure drop diagram

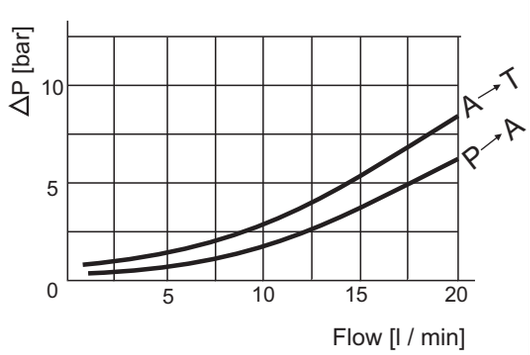

www.hydronit.com
E-mail: sales@hydronit.com
Fax +39 03621841214

Return line filter modular manifold

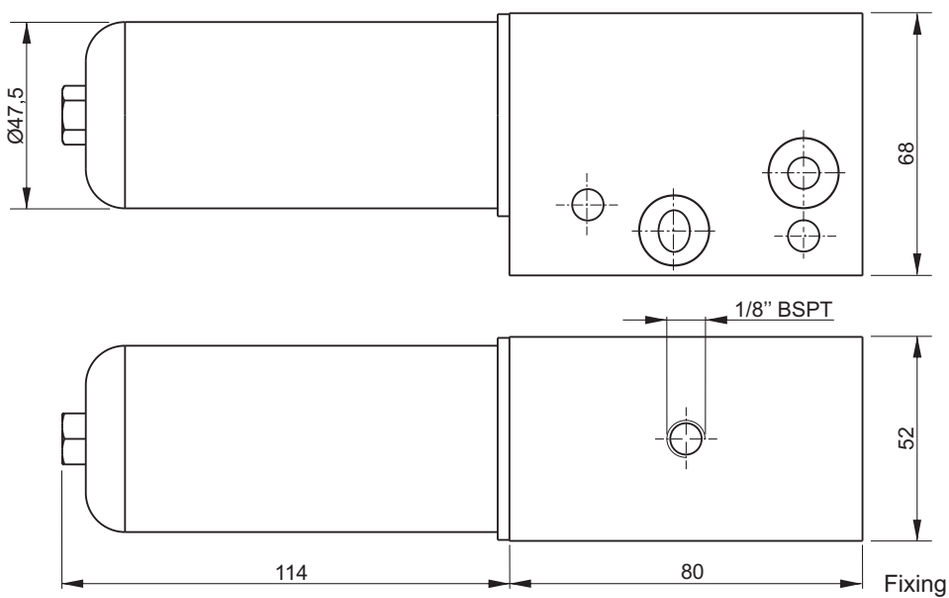

Fixing system: 2xM8 tie-rods steel class 8.8 or above

Spare part code

E60403020	Modular manifold with return filter on T

Hydraulic scheme

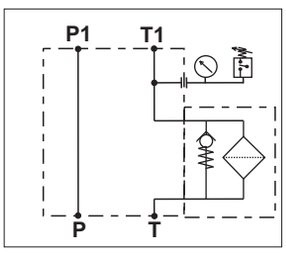

Note: code does not include the MIR40 pressure gauge or F4 pressure switch

Main features

Opening valve pressure	1±0,2 bar
Max flow	20 l/min
Filtration setting	15 µ
Oil temperature	-30 ÷ + 80 °C
Weight	0,87 kg

Note: Recommended tightening torque for M8 bolts: 16 Nm

Options

Pressure gauge for return filter manifold

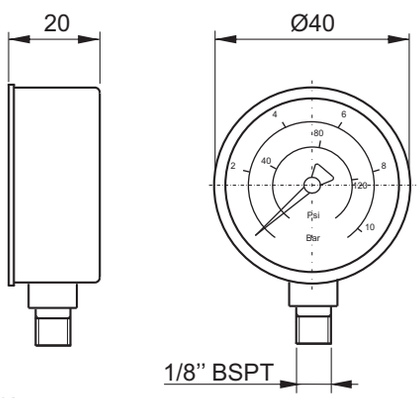

Weight: 0,1 Kg

Spare part code
MIR4010

Pressure switch

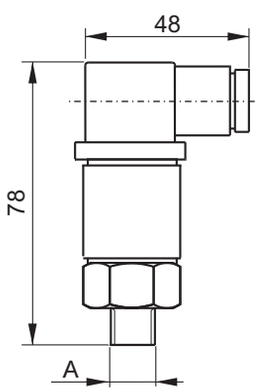

Setting range	0,2 ÷ 2,5 bar
Protection degree	IP 65
Hysteresis	10 ÷ 15 %
Weight	0,05 Kg
Max load	0,5 A at 250 VAC
Electric switch	NO/NC

	A
F4R0M3	1/8" BSPP

Spare part code
F4R0M3

www.hydronit.com
E-mail: sales@hydronit.com
Fax +39 03621841214

Accessories

In line mounting 3/4-16 UNF manifolds

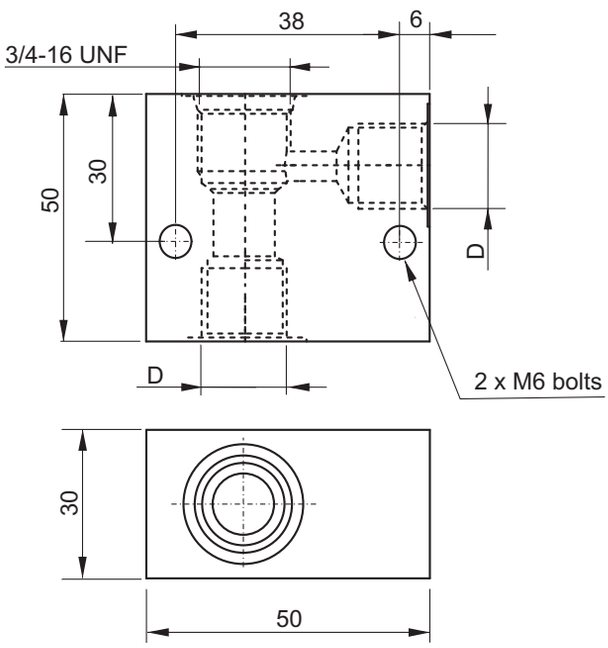

	D	Weight
BFCSAE0802	3/8” BSPP	0,16 Kg
BFCSAE0801	1/4” BSPP	0,48 Kg

Spare part codes	
BFCSAE0802	**BFCSAE0801**

Foot mounting support

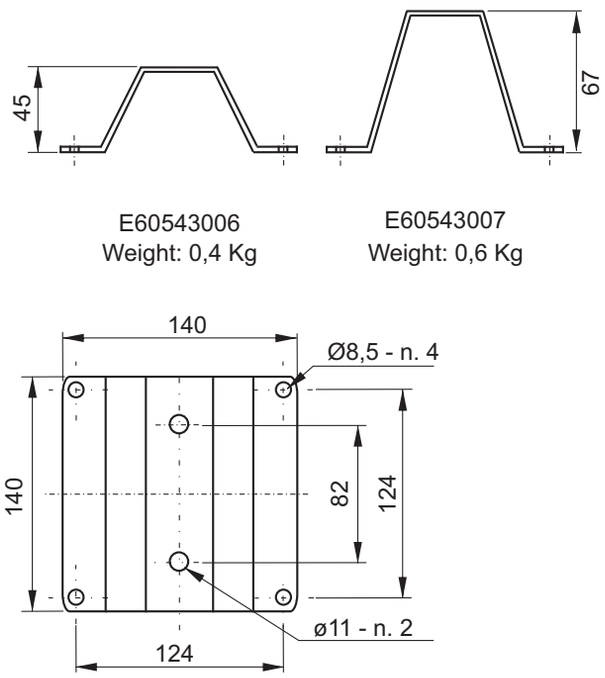

E60543006
Weight: 0,4 Kg

E60543007
Weight: 0,6 Kg

E60543006: suitable for all tanks except E60303012

E60543007: recommended for E60303011, E60303012 tanks and with frame 90 AC integral motors.

Spare part codes	
E60543006	**E60543007**

Gauge isolator F-F

Max working pressure: 350 bar

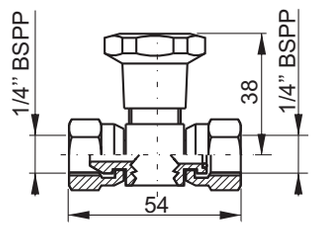

Weight: 0,14 Kg **EMIL01C**

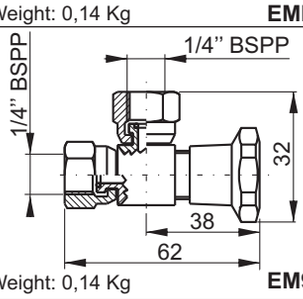

Weight: 0,14 Kg **EM9001C**

Spare part code
EM9001C / EMIL01C

Pressure gauge

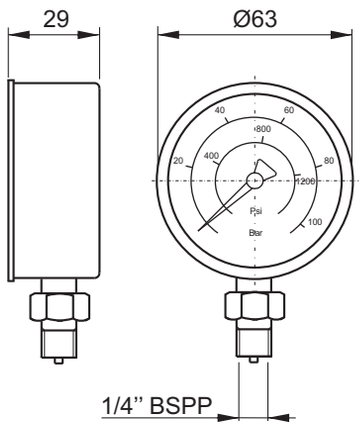

Weight: 0,2 Kg

Spare part code	
MIR63***	*****:pressure max in bar (060, 100, 160, 250, 315 bar)**

Pressure switch

Protection degree	IP 65
Hysteresis	10 ÷ 15 %
Weight	0,05 Kg
Max load	0,5 A at 250 VAC
Electric switch	NO/NC

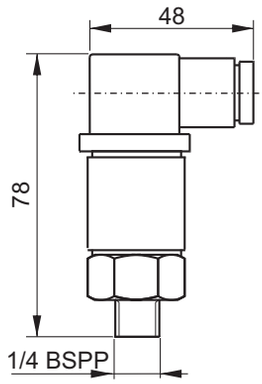

Spare part code	
F401***	*****:pressure max in bar (050, 100, 200, 400 bar)**

Section 40
MOTORS

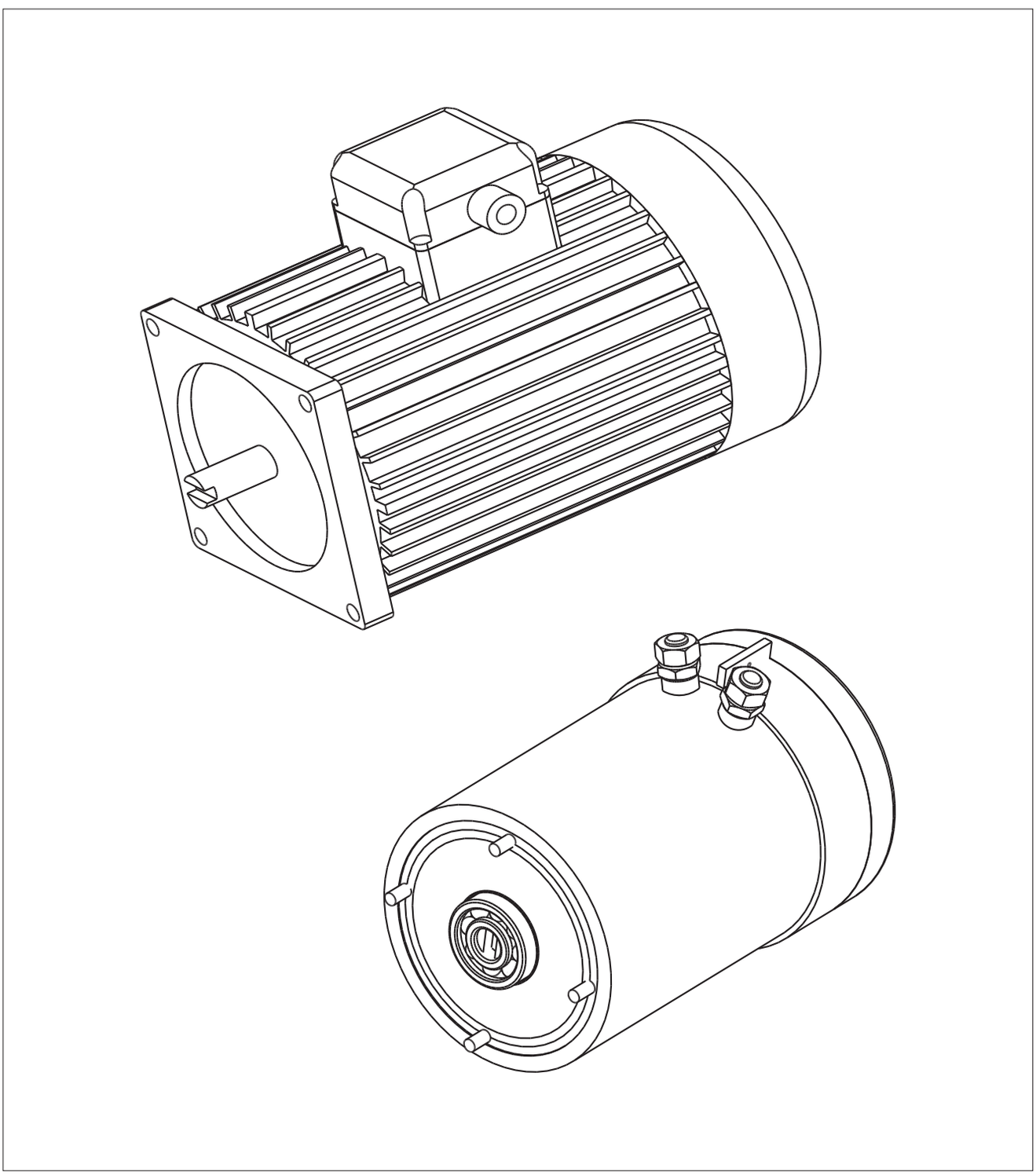

www.hydronit.com
E-mail: sales@hydronit.com
Fax +39 03621841214

Integral DC motors Ø 80

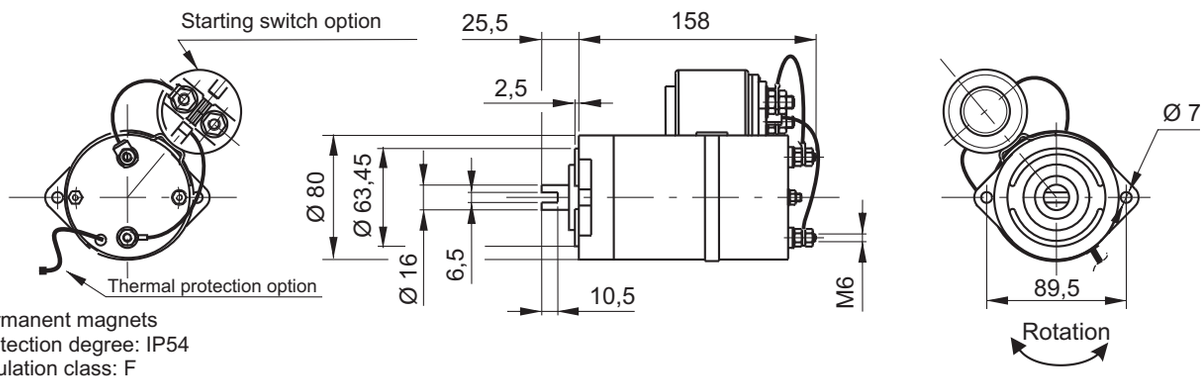

Permanent magnets
Protection degree: IP54
Insulation class: F
Weight: 2,6 kg

Code

Description	PPC assembly code	Spare part code	Nominal duty cycle	Nominal speed	Nominal current
500W 12V DC motor	**0,5 12DC**	**M46C1S005**	S2: 6min S3: 10% ED	2800 rpm	90 A
500W 24V DC motor	**0,5 24DC**	**M46C2S005**	S2: 6min S3: 10% ED	2800 rpm	50 A
800W 12V DC motor	**0,8 12DC**	**M46C1S008**	S2: 3min S3: 10% ED	4000 rpm	130 A
800W 24V DC motor	**0,8 24DC**	**M46C2S008**	S2: 4min S3: 10% ED	4000 rpm	80 A
500W 12V DC motor with thermal protection	**0,5 12DC/T**	**M46C1ST05**	S2: 6min S3: 10% ED	2800 rpm	90 A
500W 24V DC motor with thermal protection	**0,5 24DC/T**	**M46C2ST05**	S2: 6min S3: 10% ED	2800 rpm	50 A
800W 12V DC motor with thermal protection	**0,8 12DC/T**	**M46C1ST08**	S2: 3min S3: 10% ED	4000 rpm	130 A
800W 24V DC motor with thermal protection	**0,8 24DC/T**	**M46C2ST08**	S2: 4min S3: 10% ED	4000 rpm	80 A

Options

Description	PPC assembly code	Spare part code
12 or 24V DC 150 Amp start switch + mounting kit	**S150 12DC 80** **S150 24DC 80**	**M47SC0001 + M47SK0801** (12V DC) **M47SC0002 + M47SK0801**(24V DC)
Remote wired control with two buttons and 3m cable (see U040.40.03)	**P0201** **P0202**	**P0201** (single acting) **P0202** (double acting)

Notes: the starting switch mounting kit is provided when specifying the **/S150** in PPC assembly code.
When ordering spare starting switches, it must be ordered separately (code: M47SK0801).

Coupling

Description	PPC assembly code / Spare part code
Shaft coupling for Ø 80 DC motors and gr.1 pump	**E36200002**
Shaft coupling for Ø 80 DC motors and gr.0 pump	**E36200006**

Note: the coupling is already included when specifying the motor in PPC assembly code. It is to be indicated only when ordering PPC with no motor but with coupling.

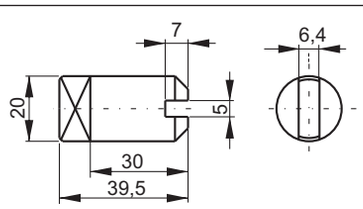

E36200002

Weight: 0,075 kg

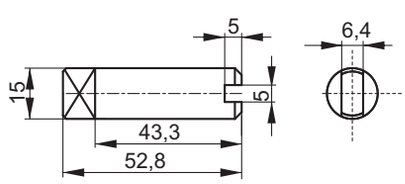

E36200006

Weight: 0,063 kg

www.hydronit.com
E-mail: sales@hydronit.com
Fax +39 03621841214

Integral DC motors Ø 112

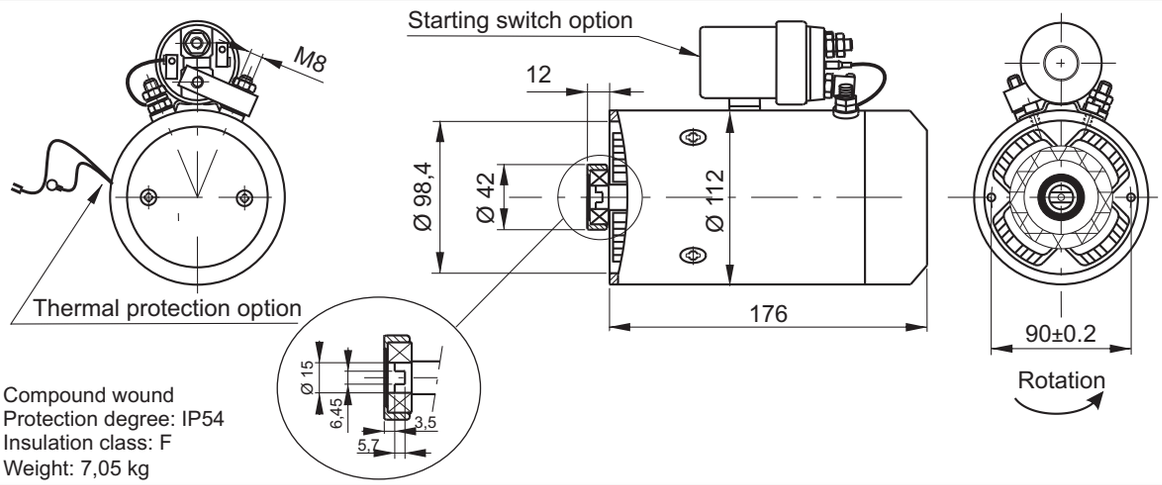

Compound wound
Protection degree: IP54
Insulation class: F
Weight: 7,05 kg

Code

Description	PPC assembly code	Spare part code	Nominal duty cycle	Nominal speed	Nominal current
1600W 12V DC motor	**1,6 12DC**	**M46C1S016**	S2: 2min S3: 7,5% ED	2600 rpm	230 A
2200W 24V DC motor	**2,2 24DC**	**M46C2S022**	S2: 1,2min S3: 4,5% ED	2600 rpm	140 A
1600W 12V DC motor with thermal protection	**1,6 12DC/T**	**M46C1ST16**	S2: 2min S3: 7,5% ED	2600 rpm	230 A
2100W 12V DC motor with thermal protection	**2,1 12DC/T**	**M46C1ST21**	S2: 1,2min S3: 7,5% ED	2300 rpm	330 A
2200W 24V DC motor with thermal protection	**2,2 24DC/T**	**M46C2ST22**	S2: 1,2min S3: 4,5% ED	2600 rpm	140 A

Options

Description	PPC assembly code	Spare part code
Starting switch 150A 12 or 24V DC + mounting kit	**S150 12DC 112** **S150 24DC 112**	**M47SC0001 + M47SK1121** (12V DC) **M47SC0002 + M47SK1121**(24V DC)
Remote wired control with two buttons and 3m cable (see U040.40.03)	**P0201** **P0202**	**P0201** (single acting) **P0202** (double acting)
DC motors plastic cover	**F16000001**	**F16000001**

Notes: the starting switch mounting kit is provided when specifying the **/S150** in PPC assembly code.
When ordering spare starting switches, it must be ordered separately (code: M47SK1121).

Coupling

Description	PPC assembly code / Spare part code
Shaft coupling for Ø112 and Ø 125 DC motors	**E36200001**

Note: the coupling is already included when specifying the motor in PPC assembly code.
The coupling spare code is to be indicated only when ordering PPC with no motor, but with coupling.

DC motors plastic cover

Weight: 0,27 kg

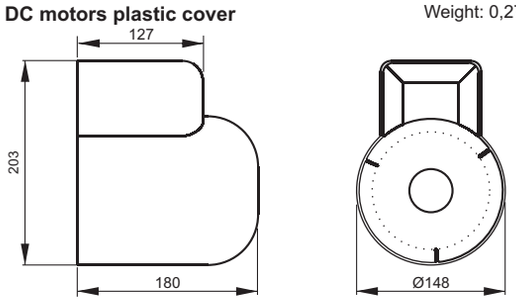

Coupling

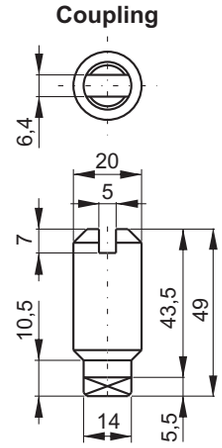

Weight: 0,094 kg

www.hydronit.com
E-mail: sales@hydronit.com
Fax +39 03621841214

Fan cooled integral DC motors Ø 125

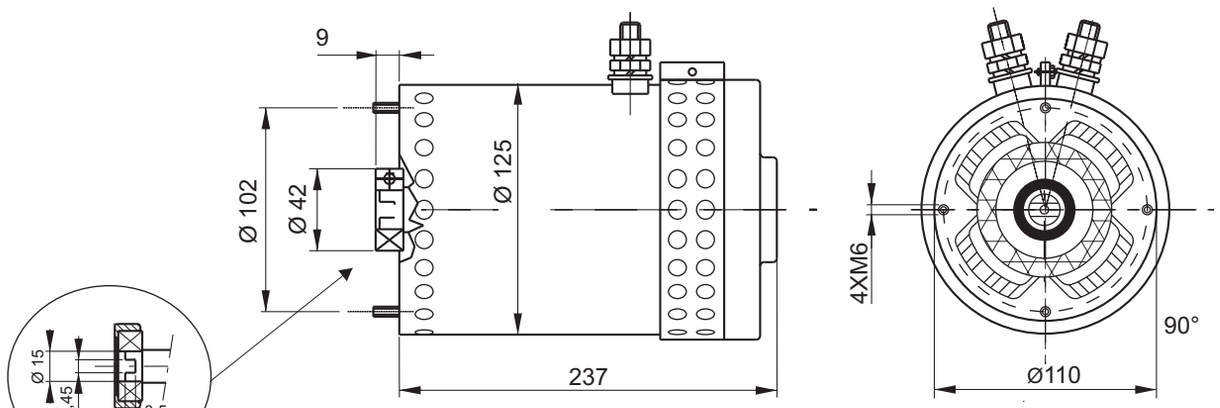

Compound wound
Protection degree: IP20
Insulation class: F
Weight: 11kg

Code

Description	PPC assembly code	Spare part code	Nominal duty cycle	Nominal speed	Nominal current
2400W 12V DC motor with thermal protection & fan	**2,4 12DC/T**	**M46C1ST24**	S2: 4min S3: 7,5% ED	3400 rpm	290 A
3000W 24 V DC motor with thermal protection & fan	**3 24DC/T**	**M46C2ST30**	S2: 4min S3: 7,5% ED	3500 rpm	170 A

Options

Description	PPC assembly code	Spare part code
Starting switch 200A 12 or 24V DC	**S200 12DC** **S200 24DC**	**M47ZC0001** (12V DC) **M47ZC0002** (24V DC)
Remote wired control with two buttons and 3m cable (see U040.40.03)	**P0201** **P0202**	**P0201** (single acting) **P0202** (double acting)

Coupling

Description	PPC assembly code / Spare part code
Shaft coupling for Ø 112 and Ø125 DC motors	**E36200001**

Note: the coupling is already included when specifying the motor in PPC assembly code.
The coupling spare code is to be indicated only when ordering PPC with no motor, but with coupling.

Coupling

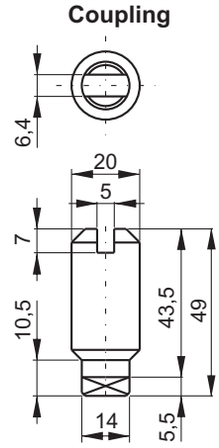

Weight: 0,093 kg

Remote control P0201: for single acting cylinder

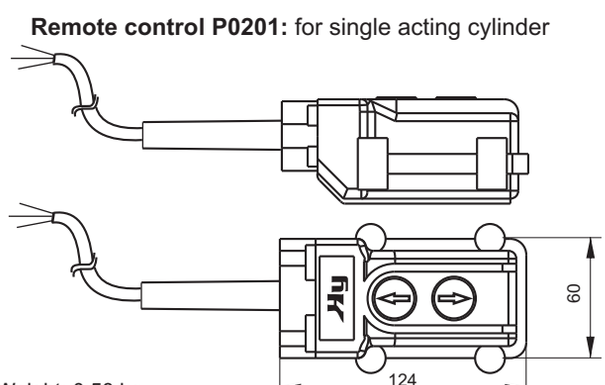

Weight: 0,58 kg
Protection degree: Ip65

Remote control P0202: for double acting cylinder

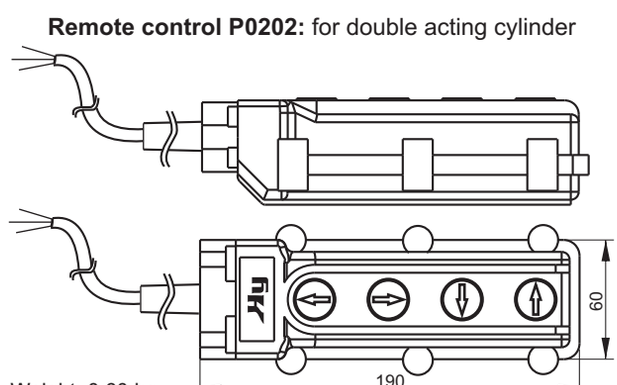

Weight: 0,60 kg
Protection degree: Ip65

www.hydronit.com
E-mail: sales@hydronit.com
Fax +39 03621841214

Heavy duty DC motors Ø 151 with fan cooling

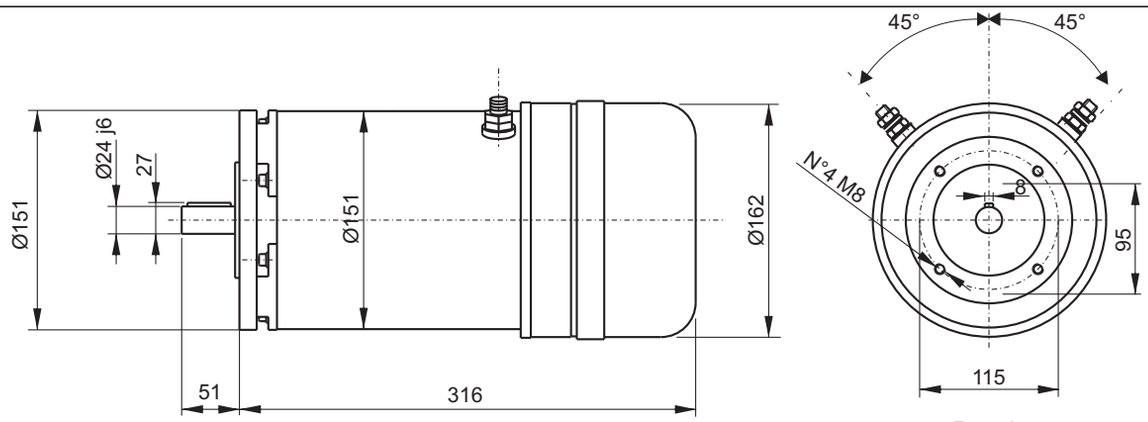

Series wound
Protection degree: IP20
Insulation class: F

Weight: 21,5 kg
Front attachment: B14-90

Code

Description	PPC code	Spare part code	Nominal duty cycle	Nominal speed	Nominal current	Mounting kit
2500W 12V DC motor + thermal protection & fan	**2,5HD 12DC/T**	**MB14C1ST25**	S2: 16min	1700 rpm	290 A	XB1490
3000W 24V DC motor + thermal protection & fan	**3HD 24DC/T**	**MB14C2ST30**	S2: 16min	1700 rpm	170 A	XB1490
4000W 24V DC motor + thermal protection & fan	**4HD 24DC/T**	**MB14C2ST40**	S2: 10min	2000 rpm	240 A	XB1490

Options

Description	PPC assembly code	Spare part code
Starting switch 200A 12 or 24V DC	**S200 12DC** **S200 24DC**	**M47ZC0001** (12 V DC) **M47ZC0002** (24 V DC)
Remote wired control with two/four buttons and 3m cable (see U040.40.03)	**P0201** **P0202**	**P0201** (single acting) **P0202** (double acting)

The mounting kit is already included when specifying the motor in PPC assembly code.
When ordering spare part motors , the mounting kit must be ordered separately.

Other B14 DC motors for heavy duty or special applications

They are available with Ø125, Ø151 or Ø191 in multiple executions, engineered to perform heavy duty cycles and tailor made to suit each specific application, with or without fan cooling or thermal protection. They are mounted on the central manifold with B14 standard mounting kits (see tables U040.40.11 and following).
To properly choose these motors, following minimum information must be provided to our technical office: 1) motor power and voltage, 2) application type, 3) duty factors: S2 [min] continuous running time and S3 [%] percentage of running time on total cycle time, 4) required motor speed, 5) quantity to be supplied.

Some examples:

Cod. MB14M1S010: 1000W 12V DC frame 80 B14 motor

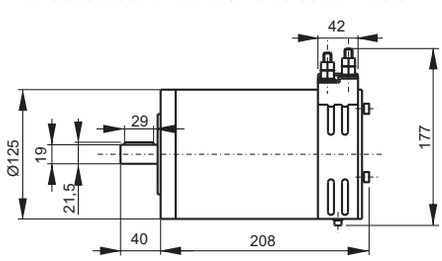

Cod. MB14M2S020: 2000W 24V DC frame 80 B14 motor

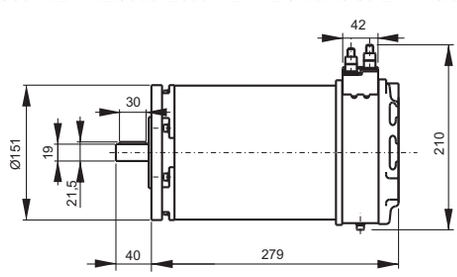

www.hydronit.com
E-mail: sales@hydronit.com
Fax +39 03621841214

DC motors choice and electric connection schemes

DC motors choice

Once required pressure and flow and available voltage (12 or 24V DC) are known, you can select the motor checking on each provided diagram if a pump displacement is available at the intersection of pressure and flow values. On the relevant “I” curve you obtain the absorbed current. When the intersection point is not exactly on a pump curve, choose the closer pump.
On the right hand diagram, from the current value, you can easily obtain the maximum allowed S2 (min) and S3 (%) values. S2 gives the allowable motor continuous running time in minutes, S3 gives the allowable running time in % of the total cycle.
If obtained S2 and S3 values are not enough for required duty cycle, choose a bigger motor and repeat the calculation on the new motor curves.

Example:
For our application we have following data:
flow = 3 l/min, max pressure = 100 bar, not clearly defined duty cycle.
-We check on 1,6 Kw 12V DC motor diagram and see there is a pump available.
-We choose from curves 1,3 pump: a 1,3 cm^3/rev pump. On the corresponding “I” curve we read 125 A absorbed current. In these conditions on the S2 / S3 diagram we read that the DC motor can work for maximum 7 min (S2), that is 17% (S3) of the total cycle, i.e. after 7 min working, the motor should cool down for at least 34 min.
-The total cycle time is calculated adding the working time and the idle time (17% working time plus 83% idle time), in this case 41 min. If this duty cycle is not adequate for our application, we must choose a higher power DC motor and check the relevant diagram again.

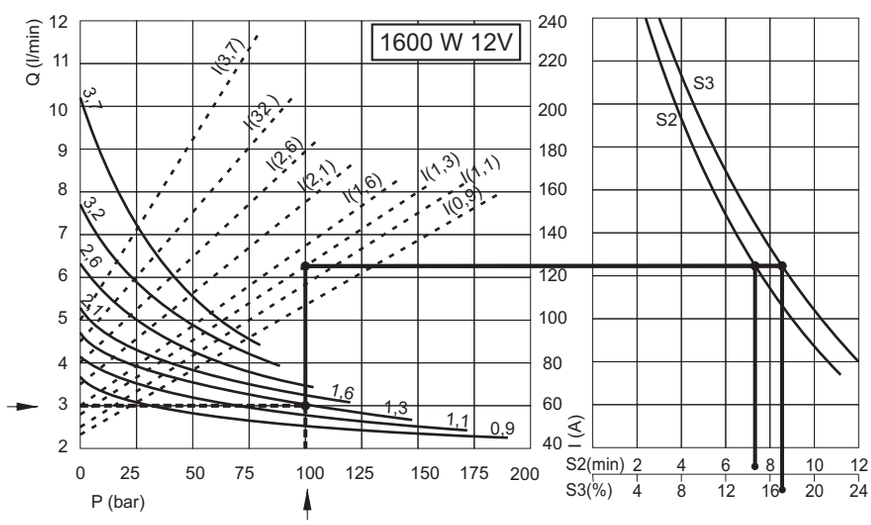

Electric connection schemes

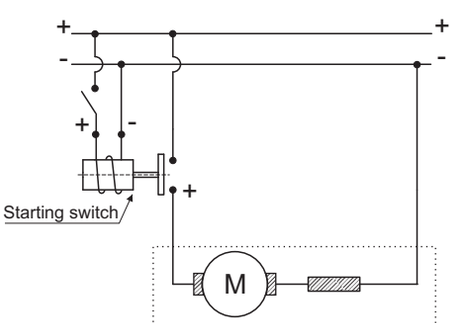

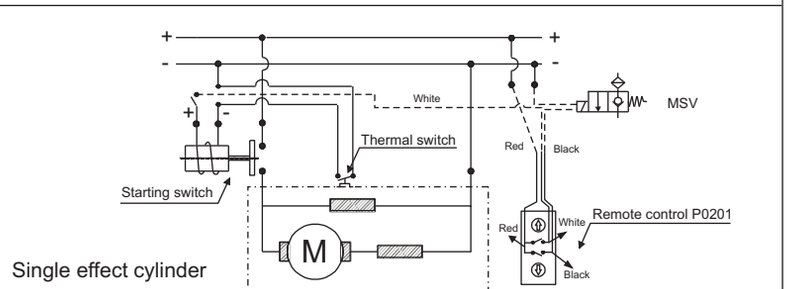

Single effect cylinder

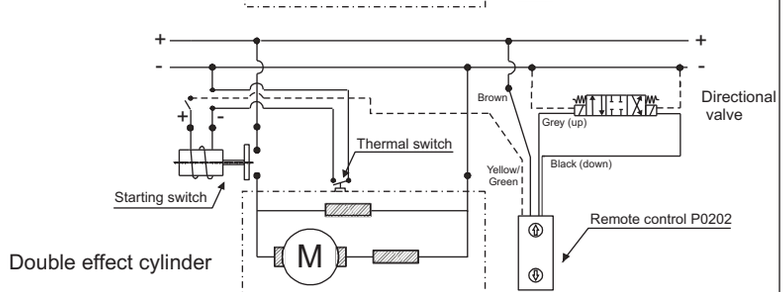

Double effect cylinder

www.hydronit.com
E-mail: sales@hydronit.com
Fax +39 03621841214

DC motors diagrams

M46C1S005 500 W 12V

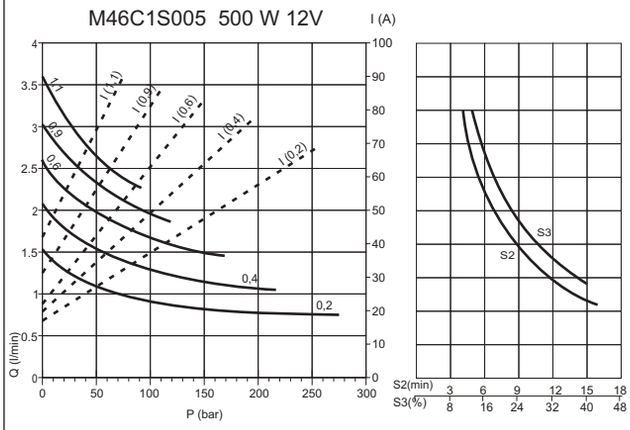

M46C2S005 500 W 24V

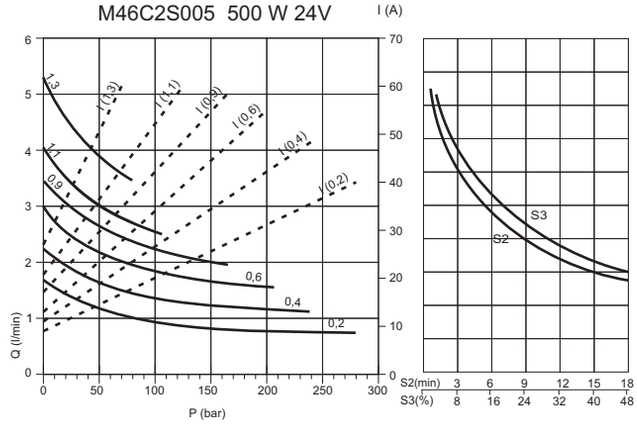

Test made with battery 135Ah 50% charged at 15°C and mineral oil ISO VG46 at 40°C

M46C1S008 800 W 12V

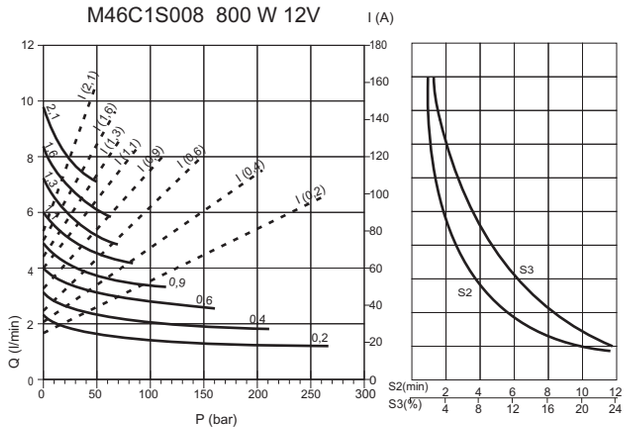

M46C2S008 800 W 24V

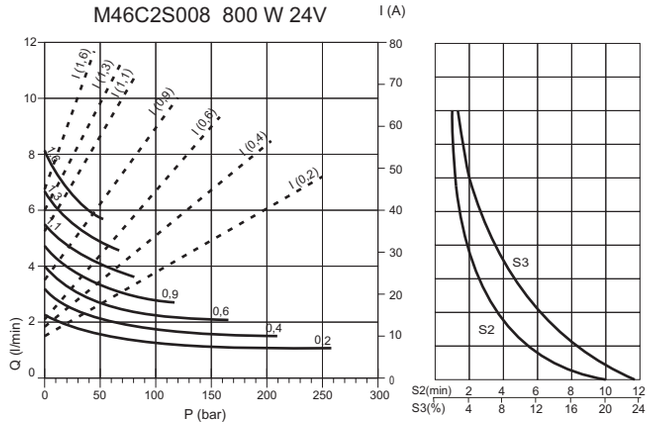

Test made with battery 135Ah 50% charged at 15°C and mineral oil ISO VG46 at 40°C

M46C1S016 1600 W 12V

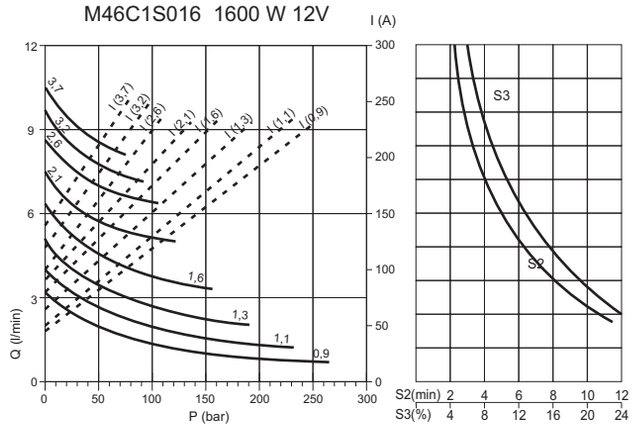

M46C2S022 2200 W 24V

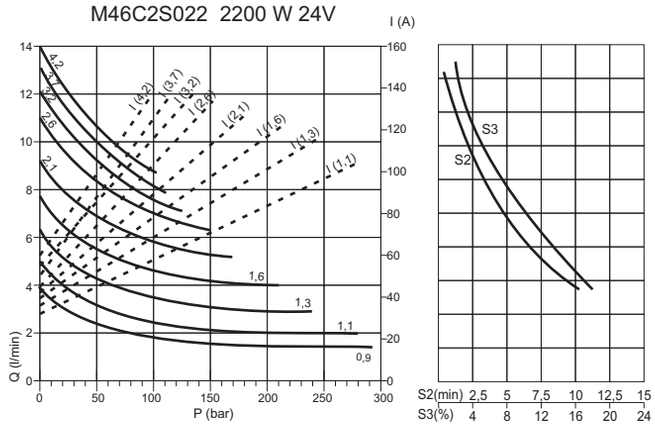

Test made with battery 135Ah 50% charged at 15°C and mineral oil ISO VG46 at 40°C

www.hydronit.com
E-mail: sales@hydronit.com
Fax +39 03621841214

Table U040.40.06b.00

DC motors diagrams

M46C1ST21 2100 W 12V

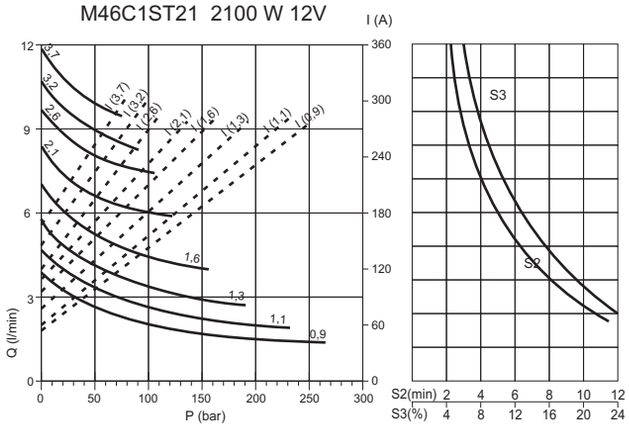

M46C1ST24 2400 W 12V

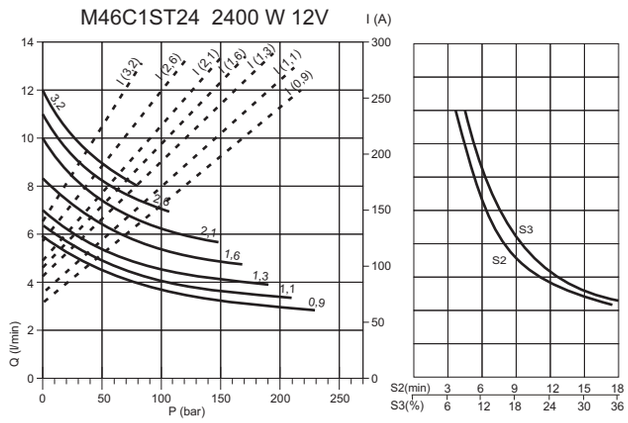

Test made with battery 135Ah 50% charged at 15°C and mineral oil ISO VG46 at 40°C

M46C2ST30 3000 W 24V

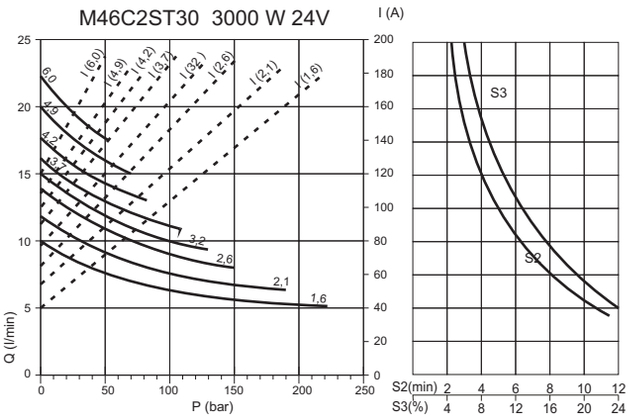

MB14C1ST25 2500 W 12V HD

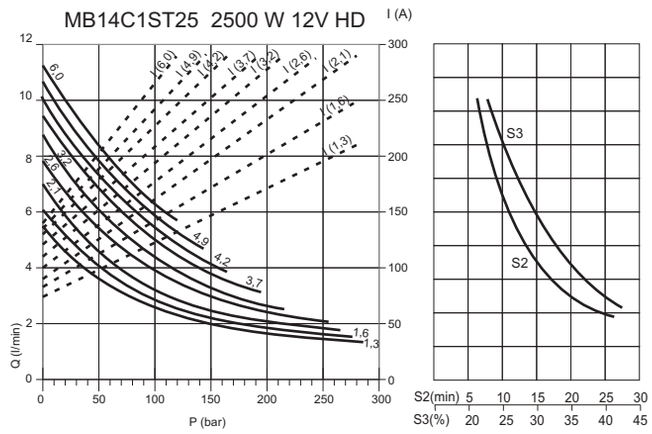

Test made with battery 135Ah 50% charged at 15°C and mineral oil ISO VG46 at 40°C

MB14C2ST30 3000 W 24V HD

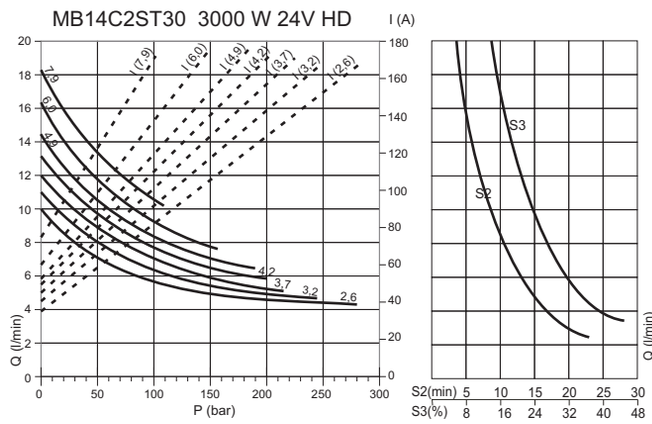

MB14C2ST40 4000 W 24V HD

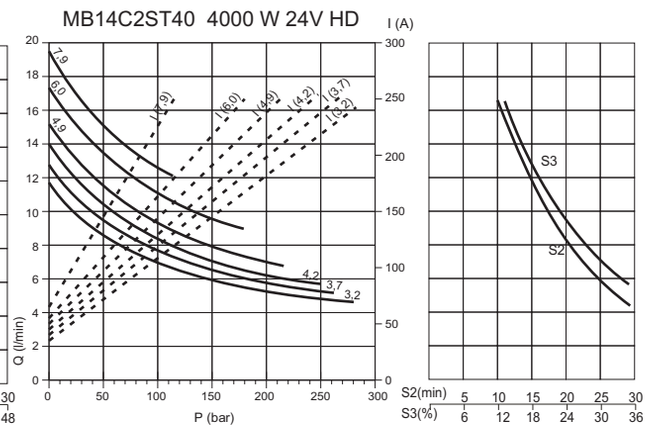

Test made with battery 135Ah 50% charged at 15°C and mineral oil ISO VG46 at 40°C

www.hydronit.com
E-mail: sales@hydronit.com
Fax +39 03621841214

Integral AC motors

Integral AC motors: the engineered solution for compact and optimised power units from 0,25 to 4 kW. The AC motors are directly flanged on the central manifold. A single coupling -see below- can suit all frame sizes and powers.
We suggest to adopt these advanced motors because of these peculiar advantages over standard B14 AC motors and because they are designed specifically for use on our mini power packs, offering an higher power density and high starting torque (in HT models) than market standard motors. Motors have a double power rating: the maximum power is for intermittent duty charge (S3 40%), which is typical for mini-power packs applications; if the application is continuative please consider the rated power as the maximum output to guarantee a proper cooling of the motor. In any case single phase motors should not run with no load to avoid the overheating.

Drawings show typical three phase motors. Single phase motors electric have different wiring box (since includes capacitors).

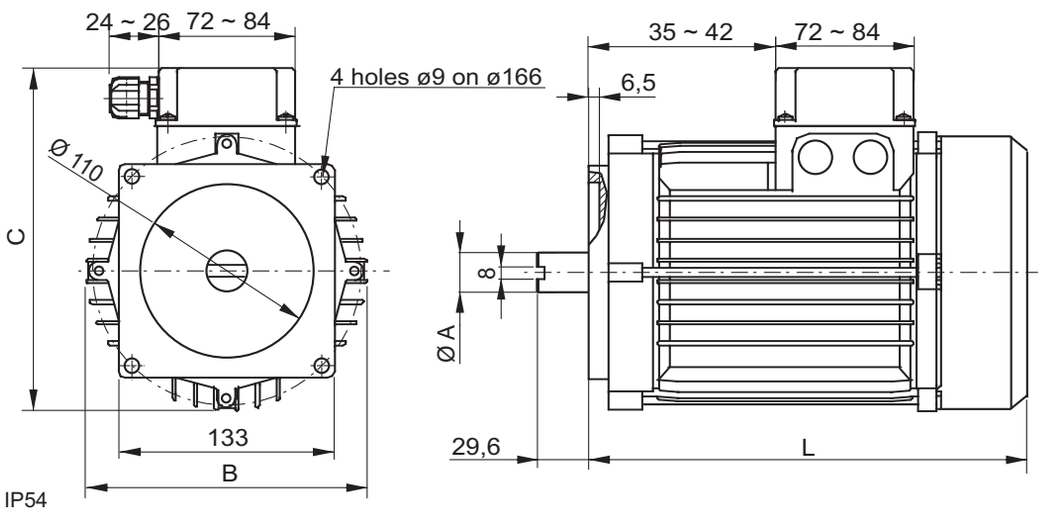

Protection degree: IP54
Insulation class: F

PPC motor assembly code

E	**AC integral motor**
150	**Maximum Power [kW]** i.e. 150 = 1,5kW
AC	**Alternate current**
3	**Phase: 3** = three phase **S** = single phase
4	**Poles: 4** = four poles **2** = two poles
3	**Frame size:** 1 = 71 2 = 80 3 = 90
S3	**Type of Duty: -** = ED 100% (S1) **S3** = intermittent duty **HT** = high torque

See a table of available codes on next table page

A single coupling can be applied on all motor frame sizes. This is the same coupling included in B14 motors mounting kit.
The coupling is already included when specifying an integral AC motor in the PPC assembly code. When ordering spare motors, the coupling is not included and must be ordered separately.

Coupling spare part code	
E36100000	**for Gr.1 pumps**

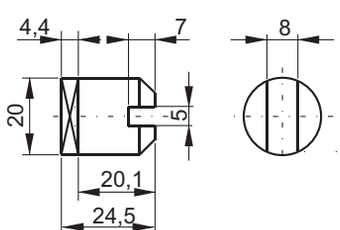

Weight: 0,046 Kg

Coupling spare part code	
E36100006	**for Gr.0 pumps**

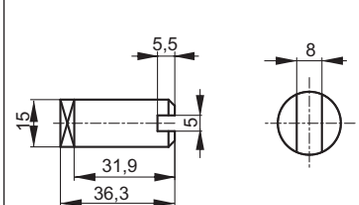

Weight: 0,040 kg

Start-up Valve for single-phase motors

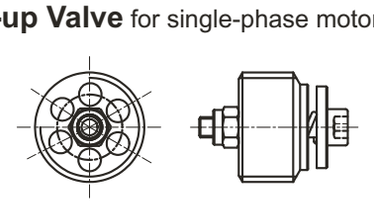

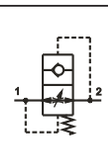

PPC assembly code	Spare part code
SUV	**VUBA01**

Hydronit
www.hydronit.com
E-mail: sales@hydronit.com
Fax +39 03621841214

Integral AC motors

Integral AC motor frame size	Maximum Power (S3 40%) kW (HP)	Rated Power (S1 continuous duty) kW (HP)	Spare motor code	Ø A	B	C	L	Weight Kg
Three-phase 4 poles (~1450 rpm at 50Hz)								
71	-	0,25 (0,35)	**E025AC341**	17	138	180	210	5,5
	-	0,37 (0,5)	**E037AC341**	17	138	180	210	5,5
	-	0,55 (0,75)	**E055AC341**	17	138	180	210	5,6
	0,75 (1)	-	**E075AC341S3**	17	138	180	210	5,6
80	0,75 (1)	0,55 (0,75)	**E075AC342S3**	19	156	202	234	10
	1,1 (1,5)	0,75 (1)	**E110AC342S3**	19	156	202	234	10,5
90	1,5 (2)	1,1 (1,5)	**E150AC343S3**	24	176	217	279	14
	2,2 (3)	1,5 (2)	**E220AC343S3**	24	176	217	279	15
	3 (4)	2,2 (3)	**E300AC343S3**	24	176	217	279	16
Three-phase 2 poles (~2900 rpm at 50Hz)								
71	-	0,37 (0,5)	**E037AC321**	17	138	180	210	5
	-	0,55 (0,75)	**E055AC321**	17	138	180	210	5
80	1,1 (1,5)	0,75 (1)	**E110AC322S3**	19	156	202	234	10
	1,5 (2)	1,1 (1,5)	**E150AC322S3**	19	156	202	234	12
	2,2 (3)	1,5 (2)	**E220AC322S3**	19	156	202	234	12
90	3 (4)	2,2 (3)	**E300AC323S3**	24	176	217	279	16
	4 (5,4)	3 (4)	**E400AC323S3**	24	176	217	279	16

Integral AC motor frame size	Maximum Power (S3 40%) kW (HP)	Rated Power (S1 continuous duty) kW (HP)	Spare motor code	Ø A	B	C	L	Weight Kg
Single-phase 4 poles (~1450 rpm at 50Hz)								
71	-	0,25 (0,35)	**E025ACS41**	17	138	180	210	6,5
	-	0,37 (0,5)	**E037ACS41**	17	138	180	210	7,2
80	0,55 (0,75)	0,37 (0,55)	**E055ACS42S3***	19	156	202	234	8
	0,75 (1)	0,55 (0,75)	**E075ACS42S3***	19	156	202	234	10
90	1,1 (1,5)	0,75 (1)	**E110ACS43S3***	24	176	217	279	13
	1,5 (2)	1,1 (1,5)	**E150ACS43S3***	24	176	217	279	15
	2,2 (3)	1,5 (2)	**E220ACS43S3***	24	176	217	279	15,5
Single-phase 2 poles (~2900 rpm at 50Hz)								
71	-	0,37 (0,5)	**E037ACS21**	17	138	180	210	6
	-	0,55 (0,75)	**E055ACS21**	17	138	180	210	6,5
80	0,75 (1)	0,55 (0,75)	**E075ACS22S3**	19	156	202	234	8
	1,1 (1,5)	0,75 (1)	**E110ACS22S3**	19	156	202	234	10
	1,5 (2)	1,1 (1,5)	**E150ACS22S3**	19	156	202	234	11
90	1,5 (2)	1,1 (1,5)	**E150ACS23S3**	24	176	217	279	12
	2,2 (3)	1,5 (2)	**E220ACS23S3**	24	176	217	279	15

Other power / frame sizes and special motor types are available on request. Motors with codes ending with ”S3” are for intermittent duty, S3 40% duty cycle means up to 6 switching on and off in an hour, i.e. the motors is ON for 4 min. and OFF for 6 min. These motors can be applied to a continuous duty (S1) at a reduced rated power. See above table.
*: these motors are available in “HT” high starting torque version too.

www.hydronit.com
E-mail: sales@hydronit.com
Fax +39 03621841214

B14 AC motors

B14 motors: for market compatibility, any standard B14 AC motor with frame 71, 80, 90 or 100/112 can be mounted. In this case two-pieces couplings and additional adaptor flanges as per tables U040.40.10, .11, .12 and .13 must be mounted.

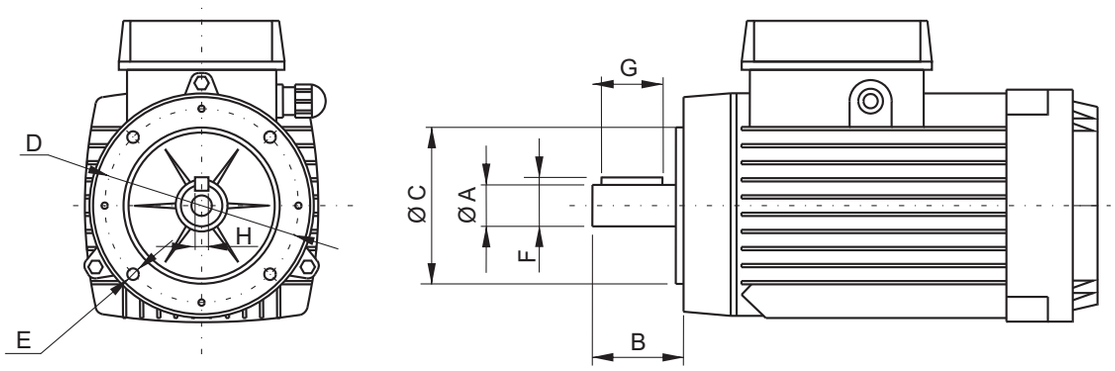

Motors overall dimensions are not indicated since they can vary substantially depending on the motor brand

B14 standard dimensions

MOTOR FRAME SIZE	Typically power range	ØA	B	ØC	D	E	F	G	H	Mounting kit
71	0,25 ~ 0,37 kW 0,37 ~ 0,5 HP	14 j6	30	70	85	M6	16	30	5	**XB1471**
80	0,55 ~ 0,75 kW 0,75 ~ 1 HP	19 j6	40	80	100	M6	21,5	40	6	**XB1480**
90	1,1 ~ 1,5 kW 1,5 ~ 2 HP	24 j6	50	95	115	M8	27	50	8	**XB1490**
100/112	2,2 ~ 7,5 kW 3 ~ 10 HP	28 j6	60	110	130	M8	31	60	8	**XB14100**

PPC B14 motor assembly code

7,5	**Power [kW]**
AC	**Alternate current**
3	**Phase: 3** = three phase **S** = single phase
4P	**Poles: 4P** = four pole **2P** = two pole
112	**Frame size:** 71, 80, 90, 100, 112
-	**Duty factor: -** = ED 100% (S1) **S3** = intermittent duty

Mounting kits spare parts

The B14 mounting kits are made of:
- a semi-coupling E36100000 (the same used for integral AC motors) on pump shaft side
- a semi-coupling on motor shaft side, which is different for any frame size
- an adaptor flange to suit the central manifold, which is also different for any frame size.

For detailed dimensions and codes see tables U040.40.09, .10, .11 and .12.
The mounting kit is already included when specifying a B14 AC motor in PPC assembly code. When ordering spare motors, the relevant mounting kit is not included and must be ordered separately.

www.hydronit.com
E-mail: sales@hydronit.com
Fax +39 03621841214

Mounting kit for frame 71 B14 motors

Adaptor flange

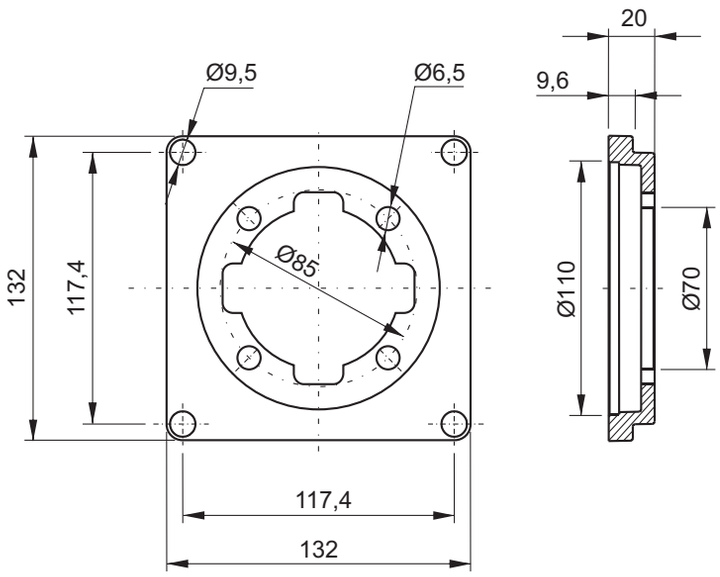

Weight: 0,18 Kg

Description	PPC assembly code*	Spare part code
B14 71 motor side semi-coupling	XB1471 -0 (gr.0) -1 (gr.1)	**E36100001**
B14 pump side semi-coupling		**E36100006** **E36100000**
B14 71 adaptor flange		**F27010001**

* Note: the coupling+ flange kit is already included when specifying a B14 motor in PPC assembly code. XB14-71 code to be indicated only when ordering PPC with no motor but with coupling + flange kit.

Coupling

Pump group 1 side **E36100000**

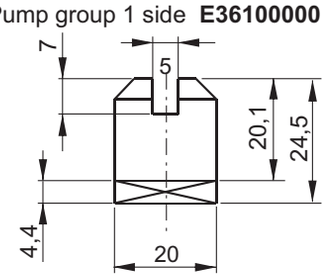

Pump group 0 side **E36100006**

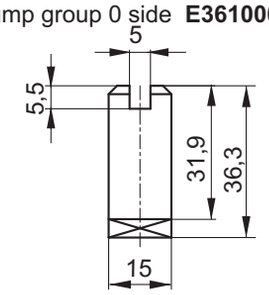

Motor side

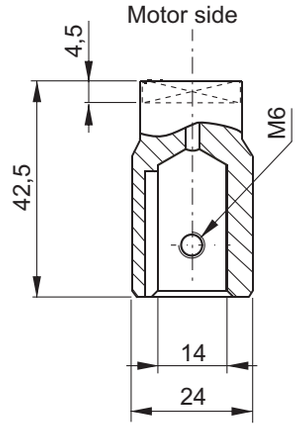

Attention! When assembling frame 71 B14 motors with X-B14 flange + couplings kit, please respect following positioning measures. Failing to do so can cause malfunctioning or components failure.

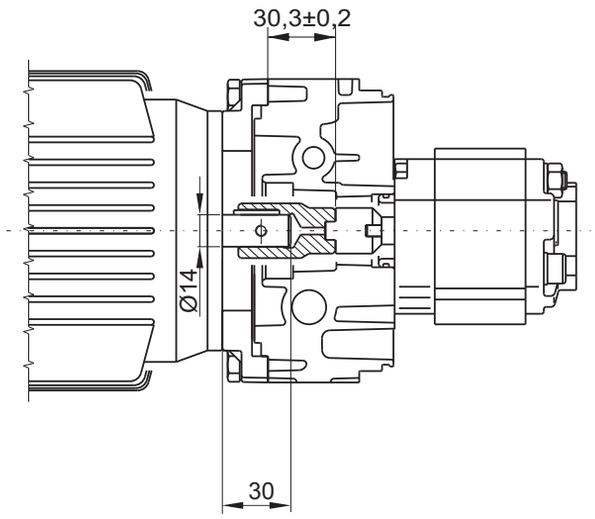

Kit weight: 0,32 Kg

www.hydronit.com
E-mail: sales@hydronit.com
Fax +39 03621841214

Mounting kit for frame 80 B14 motors

Adaptor flange

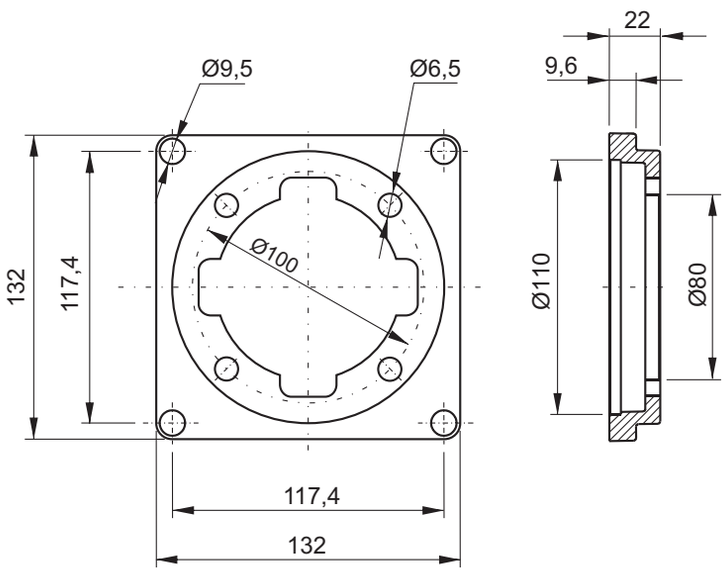

Weight: 0,21 Kg

Description	PPC assembly code*	Spare part code
B14 80 motor side semi-coupling	XB1480 -0 (gr.0) -1 (gr.1)	**E36100002**
B14 pump side semi-coupling		**E36100006** **E36100000**
B14 80 adaptor flange		**F27010002**

* Note: the coupling+ flange kit is already included when specifying a B14 motor in PPC assembly code. XB14-80 code to be indicated only when ordering PPC with no motor but with coupling + flange kit.

Coupling

Pump group 1 side **E36100000**

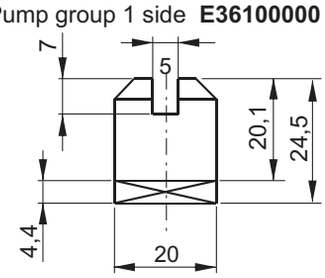

Pump group 0 side **E36100006**

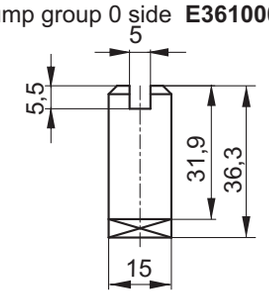

Motor side

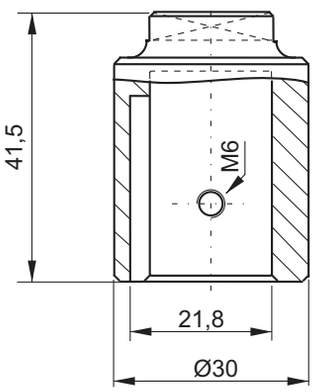

Attention! When assembling frame 80 B14 motors with X-B14 flange + couplings kit, please respect following positioning measures. Failing to do so can cause malfunctioning or components failure.

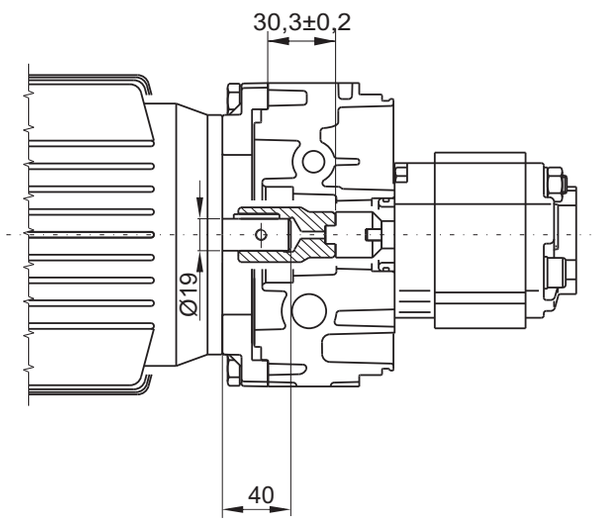

Kit weight: 0,36 Kg

www.hydronit.com
E-mail: sales@hydronit.com
Fax +39 03621841214

Mounting kit for frame 90 B14 motors

Adaptor flange

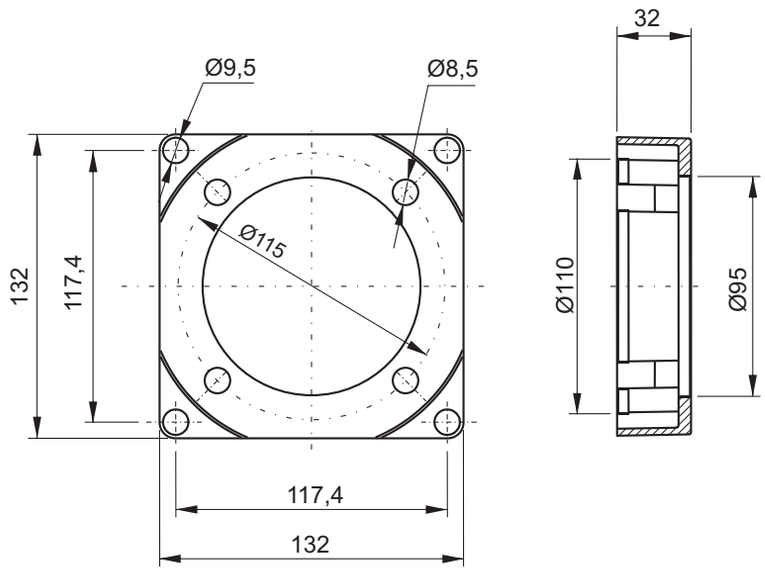

Weight: 0,35 Kg

Description	PPC assembly code*	Spare part code
B14 90 motor side semi-coupling	XB1490	**E36100003**
B14 pump side semi-coupling		**E36100000**
B14 90 adaptor flange		**F27010003**

* Note: the coupling+ flange kit is already included when specifying a B14 motor in PPC assembly code. XB14-90 code to be indicated only when ordering PPC with no motor but with coupling + flange kit.

Coupling

Pump side

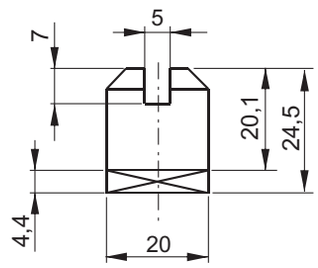

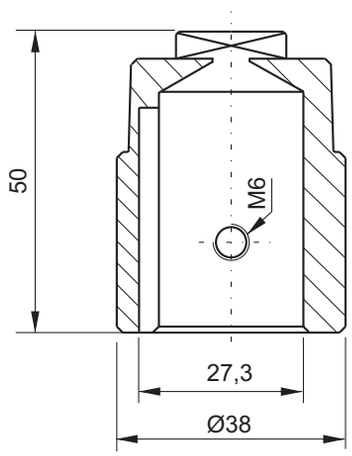

Motor side

Attention! When assembling frame 90 B14 motors with X-B14 flange + couplings kit, please respect following positioning measures. Failing to do so can cause malfunctioning or components failure.

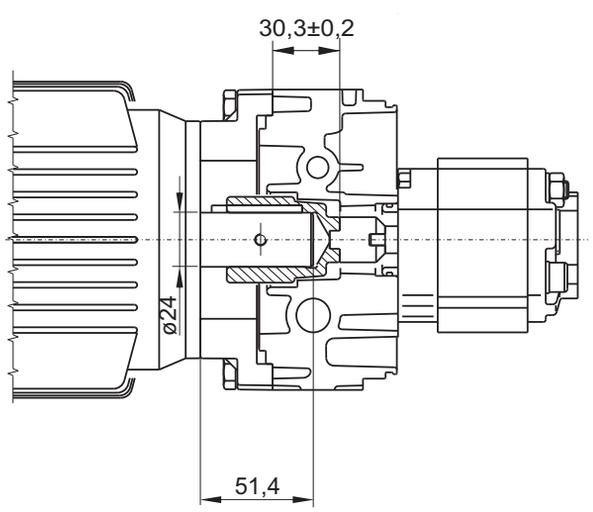

Kit weight: 0,59 Kg

www.hydronit.com
E-mail: sales@hydronit.com
Fax +39 03621841214

Mounting kit for frame 100/112 B14 motors

Adaptor flange

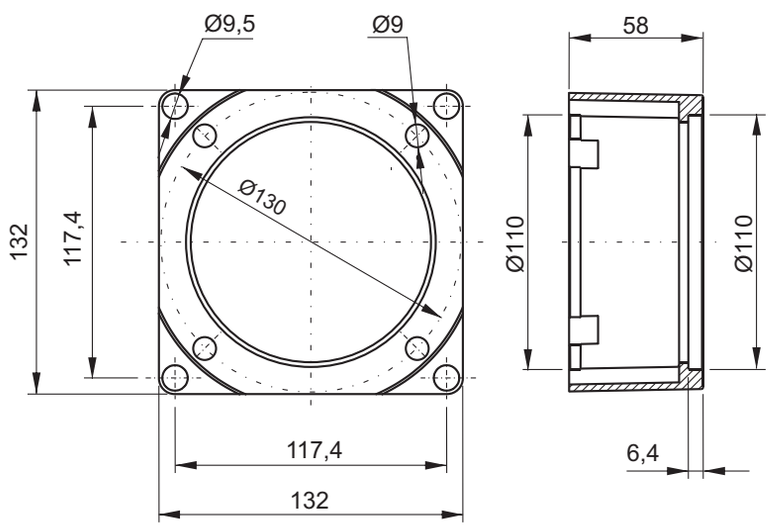

Weight: 0,66 Kg

Description	PPC assembly code*	Spare part code
B14 100 motor side semi-coupling	XB14100	**E36100004**
B14 pump side semi-coupling		**E36100000**
B14 100 adaptor flange		**F27010004**

* Note: the coupling+ flange kit is already included when specifying a B14 motor in PPC assembly code. XB14-100 code to be indicated only when ordering PPC with no motor but with coupling + flange kit.

Coupling

Pump side

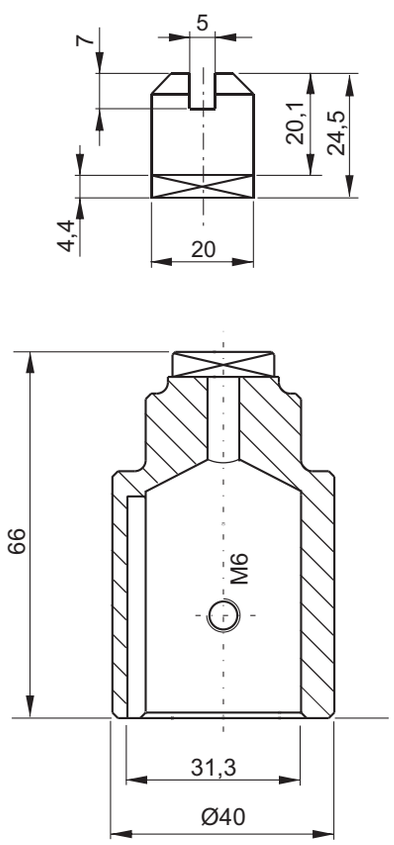

Motor side

Attention! When assembling frame 100/112 B14 motors with X-B14 flange + couplings kit, please respect following positioning measures. Failing to do so can cause malfunctioning or components failure.

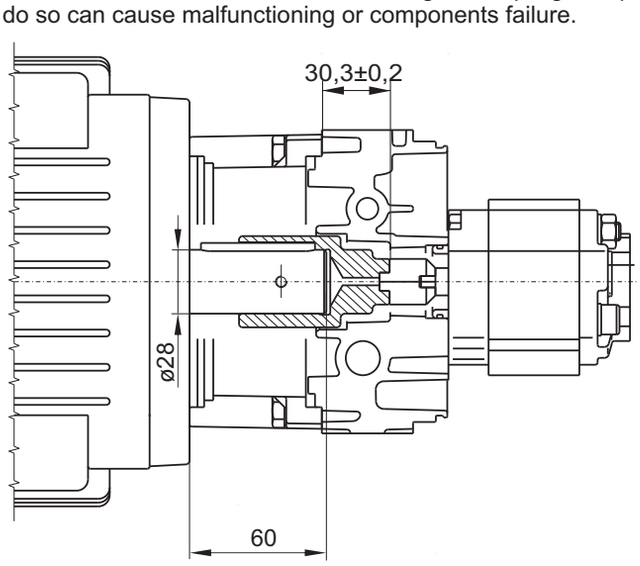

Kit weight: 0,99 Kg

Section 50

TANKS AND ACCESSORIES

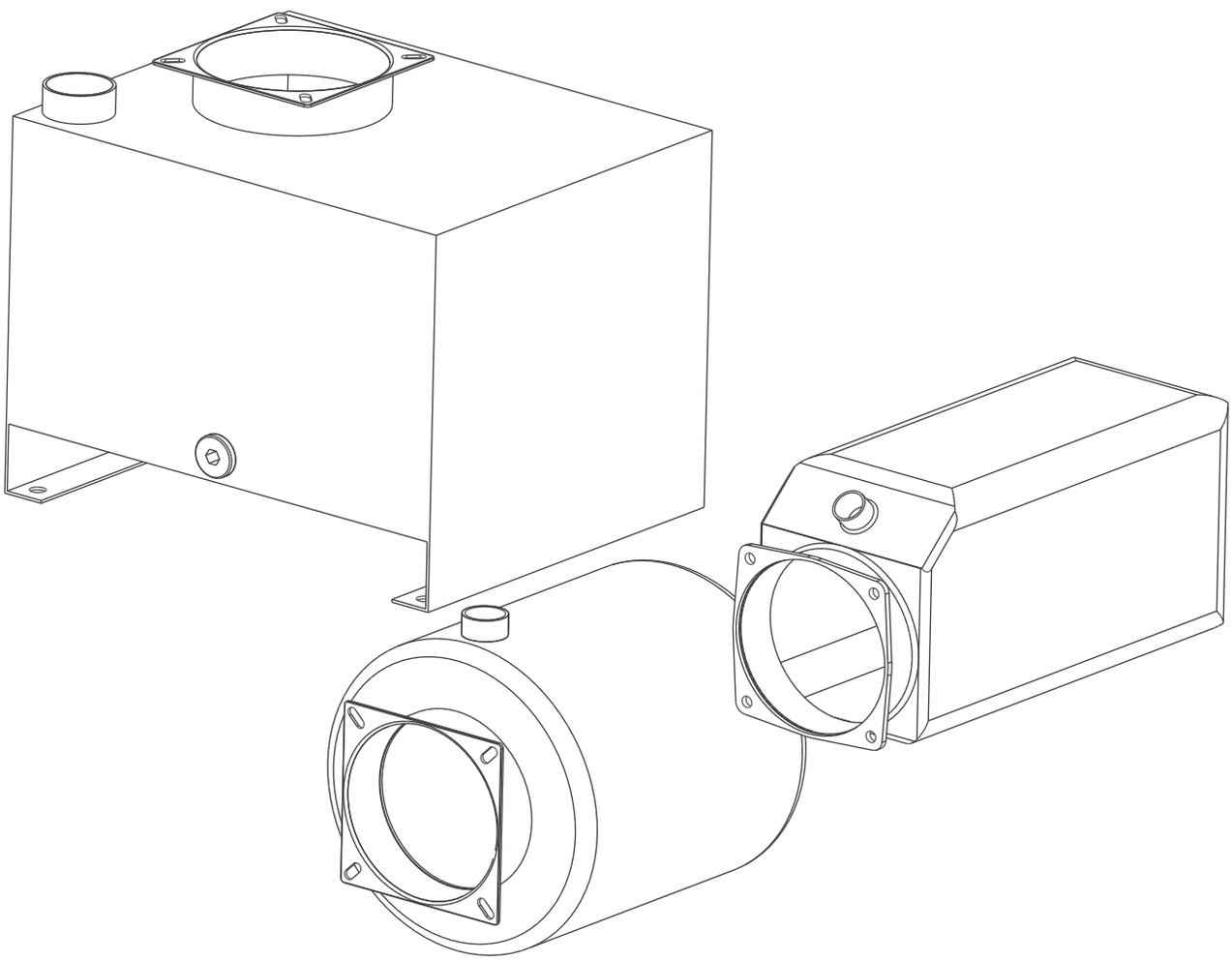

www.hydronit.com
E-mail: sales@hydronit.com
Fax +39 03621841214

Round steel tanks A & B series

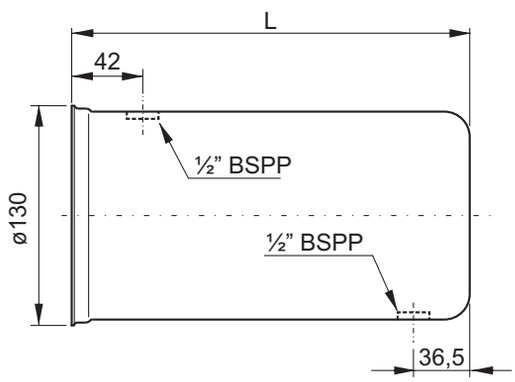

Recommended tightening torque for ½" BSPP: 10 Nm

Description	PPC assembly code	Spare part code	L (mm)	Weight	Actual filling volume (lt)	
					Horizontal	Vertical
1,5 l cylindrical horizontal / vertical mounting	**1,5A / 1,5AV**	**E60303001**	150	0,78 Kg	1,6	1,5
2,5 l cylindrical horizontal / vertical mounting	**2,5A / 2,5AV**	**E60303004**	235	1,04 Kg	2,8	2,4

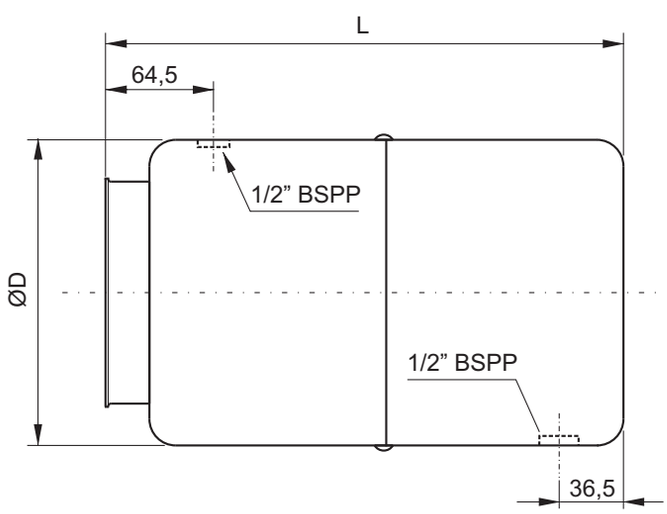

Recommended tightening torque for ½" BSPP: 10 Nm

Description	PPC assembly code	Spare part code	L (mm)	ØD (mm)	Weight	Actual filling volume (lt)	
						Horiz.	Vert.
5 l cylindrical horizontal / vertical mounting	**5B / 5BV**	**E60303006**	300	180	1,82 Kg	5,3	5,3
10 l cylindrical horizontal / vertical mounting	**10B / 10BV**	**E60303011**	262	220	2,01 Kg	10,4	10,3
12 l cylindrical horizontal / vertical mounting	**12B / 12BV**	**E60303012**	380	220	2,47 Kg	13,5	13,5

All measures are indicative in mm

Material	Fe P04-EN10130 steel sheet 1,5mm thickness
Fluid	Mineral based oil ISO/DIN 6743/4
Working temperature	-15 / +70°C

Note: the piping kit, standard suction filter, filler/breather and discharge plug are included when specifying the tank in PPC assembly code. When ordering spare parts, only the discharge plug and filler/breather are included. See accessories tables U040.50.06-07

www.hydronit.com
E-mail: sales@hydronit.com
Fax +39 03621841214

Horizontal/Vertical square welded steel tanks C series

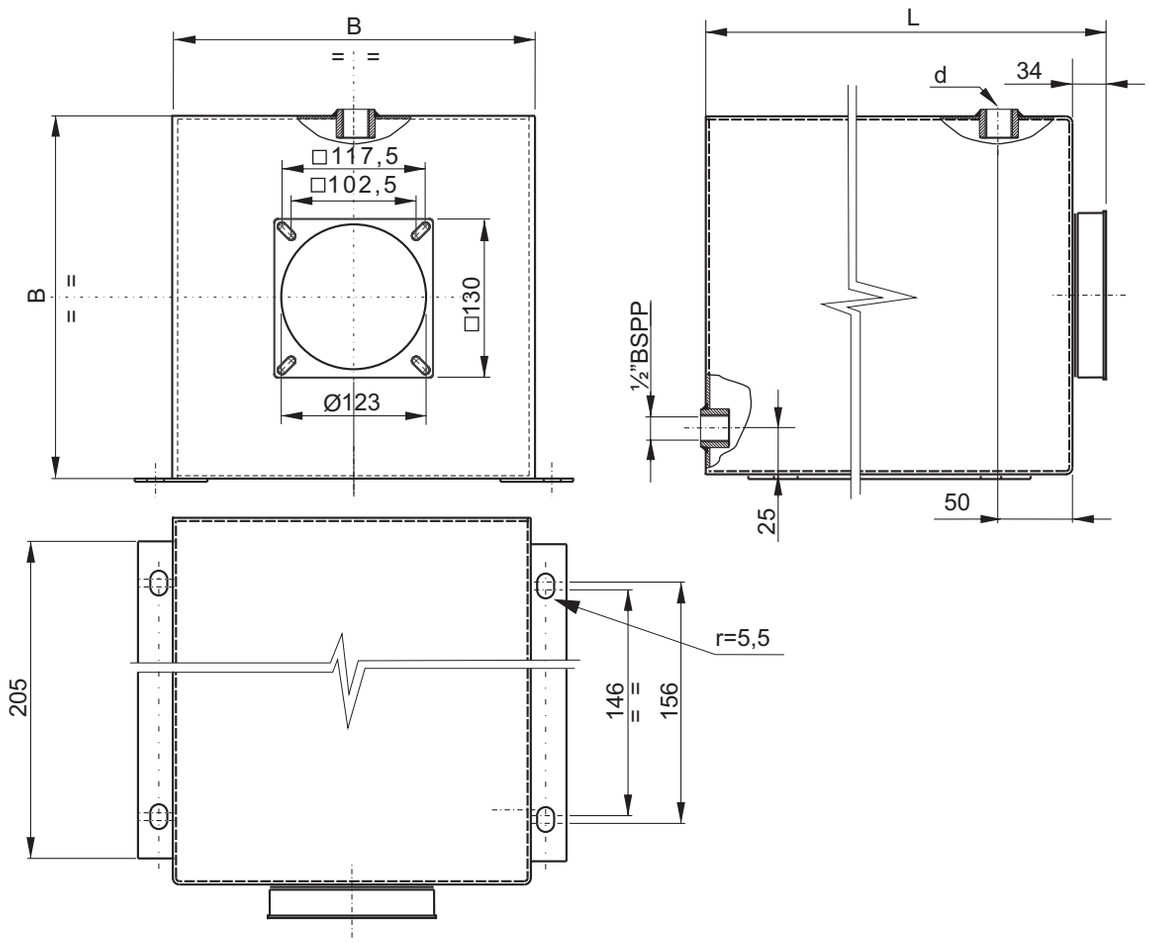

Description	PPC assembly code	Spare part code	L (mm)	B (mm)	d	Weight	Actual filling volume (lt)	
							Horizont.	Vertical
10 l squared horiz./vert. mounting	**10C / 10CV**	**E60303042**	330	185	½" BSPP	5,50 Kg	10,20	8,24
22 l squared horiz./vert. mounting	**22C / 22CV**	**E60303044**	470	223	3/4" BSPP	6,80 Kg	23,30	19,45

All measures are indicative in mm

Material	Fe P04-EN10130 steel sheet 1,5mm thickness
Fluid	Mineral based oil ISO/DIN 6743/4
Working temperature	-15 / +70°C

Notes: the piping kit, standard suction strainer, filler/breather and discharge plug are included when specifying the tank in PPC assembly code.
When ordering spare tanks, only the discharge plug and filler/breather are included.
See accessories table U040.50.06-07

On request special square welded tanks can be realized. An inquiry must be sent to our technical department with indication of quantities.

www.hydronit.com
E-mail: sales@hydronit.com
Fax +39 03621841214

Small size square welded steel tanks E series

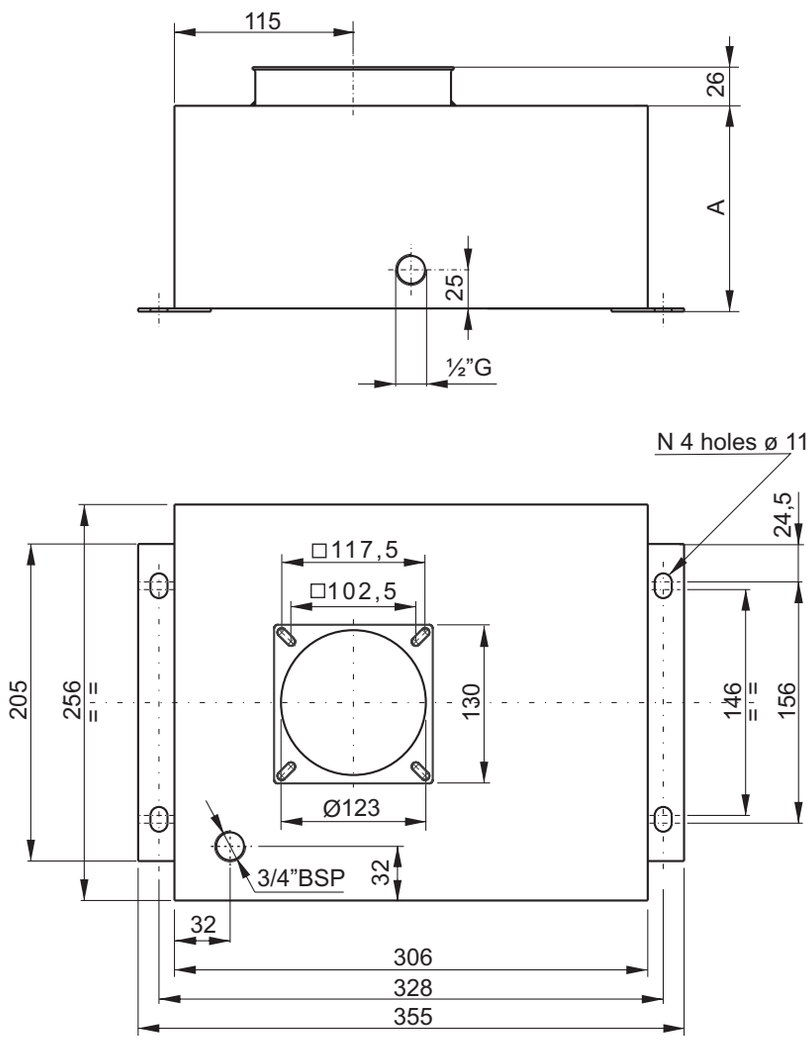

Description	PPC assembly code	Spare part code	A	Weight	Actual filling volume (lt)	
					Horizontal	Vertical
8 l square vertical mounting	**8EV**	**E60303041**	133 mm	4,50 Kg	-	10,5
15 l square vertical mounting	**15EV**	**E60303014**	237 mm	5,20 Kg	-	18

All measures are indicative in mm

Material	Fe P04-EN10130 steel sheet 1,5mm thickness
Fluid	Mineral based oil ISO/DIN 6743/4
Working temperature	-15 / +70°C

Notes: the piping kit, standard suction strainer, filler/breather and discharge plug are included when specifying the tank in PPC assembly code.
When ordering spare tanks, only the discharge plug and filler/breather are included. See accessories tables U040.50.06-07

www.hydronit.com
E-mail: sales@hydronit.com
Fax +39 03621841214

Square welded steel tanks E series

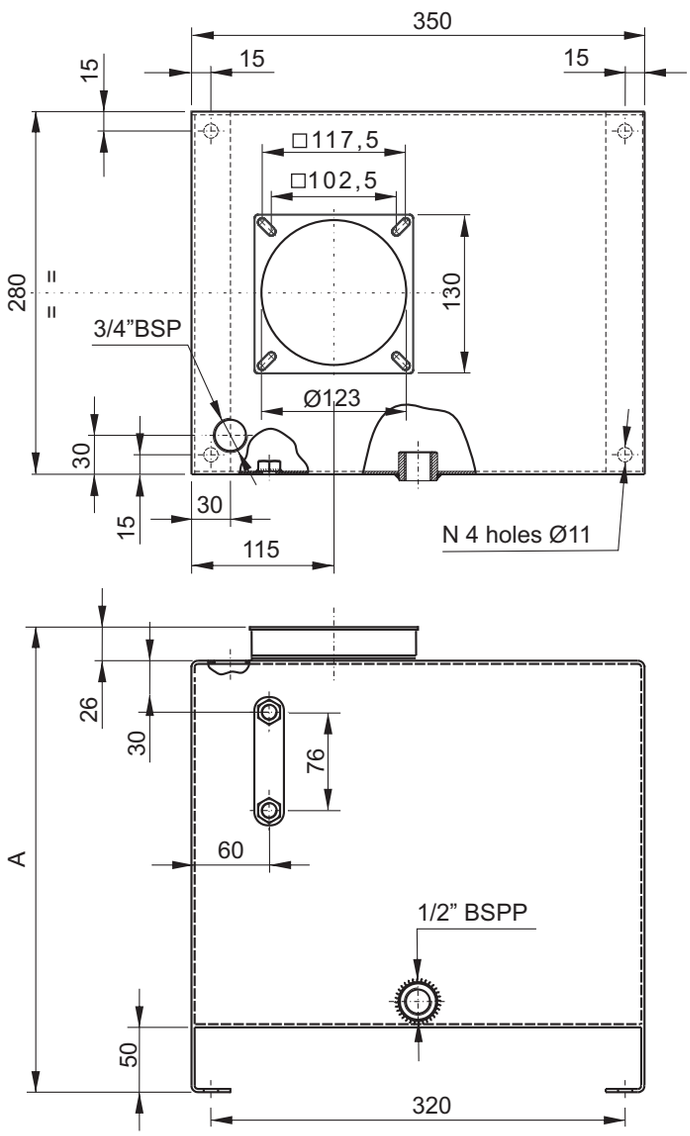

Description	PPC assembly code	Spare part code	A	Weight	Actual filling volume (lt)	
					Horizontal	Vertical
20 l squared vertical mounting	**20EV**	**E60303015**	293 mm	6,50 Kg	-	21
30 l squared vertical mounting	**30EV**	**E60303048**	423 mm	8,50 Kg	-	33,5

All measures are indicative in mm

Material	Fe P04-EN10130 steel sheet 2,5mm thickness on top and side, 1,5mm thickness front and rear
Fluid	Mineral based oil ISO/DIN 6743/4
Working temperature	-15 / +70°C

Notes: the piping kit, standard suction strainer, filler/breather, level gauge and discharge plug are included when specifying the tank in PPC assembly code.
When ordering spare tanks, only the discharge plug, filler/breather and level gauge are included. See accessories table U040.50.06-07

On request special square welded tanks can be realized. An inquiry must be sent to our technical department with indication of quantities.

www.hydronit.com
E-mail: sales@hydronit.com
Fax +39 03621841214

Square plastic tanks L, M & N series

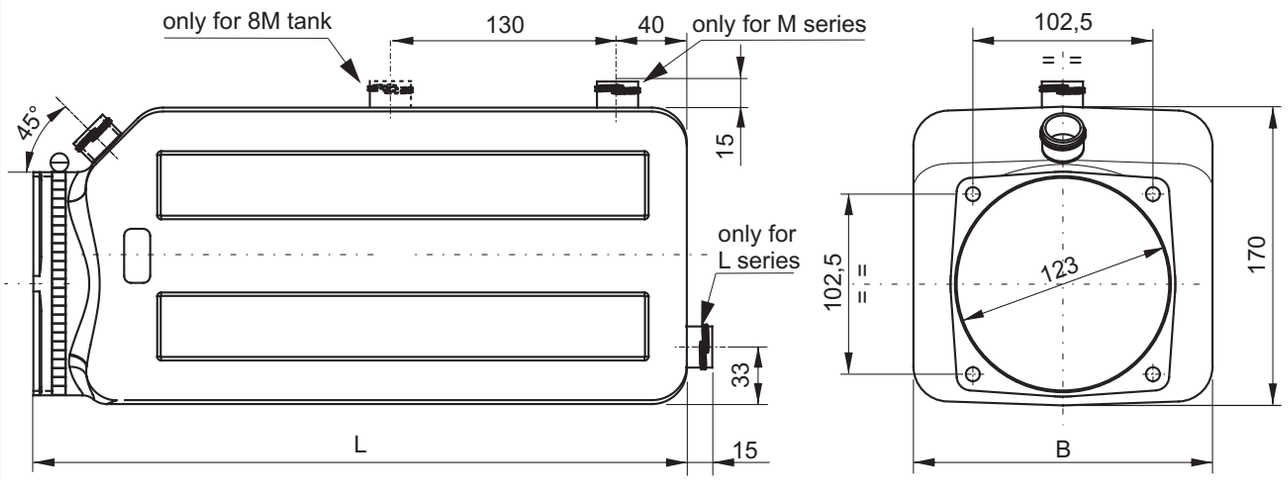

Description	PPC assembly code	Spare part code	B (mm)	L (mm)	Weight	Actual filling volume (lt)	
						Horizontal	Vertical
1,5 l squared horizontal / vertical mounting	**1,5L / 1,5LV**	**H60303016**	140	135	0,32 Kg	2,46	1,43
3 l squared horizontal / vertical mounting	**3L / 3LV**	**H60303018**	140	250	0,42 Kg	4,55	4,17
6 l squared horizontal / vertical mounting	**6L / 6LV**	**H60303020**	140	350	0,63 Kg	6,37	6,55
5 l squared horizontal / vertical mounting	**5M / 5MV**	**H60303025**	170	270	0,60 Kg	5,97	5,64
8 l squared horizontal / vertical mounting	**8M / 8MV**	**H60303033**	170	375	0,76 Kg	8,29	8,67

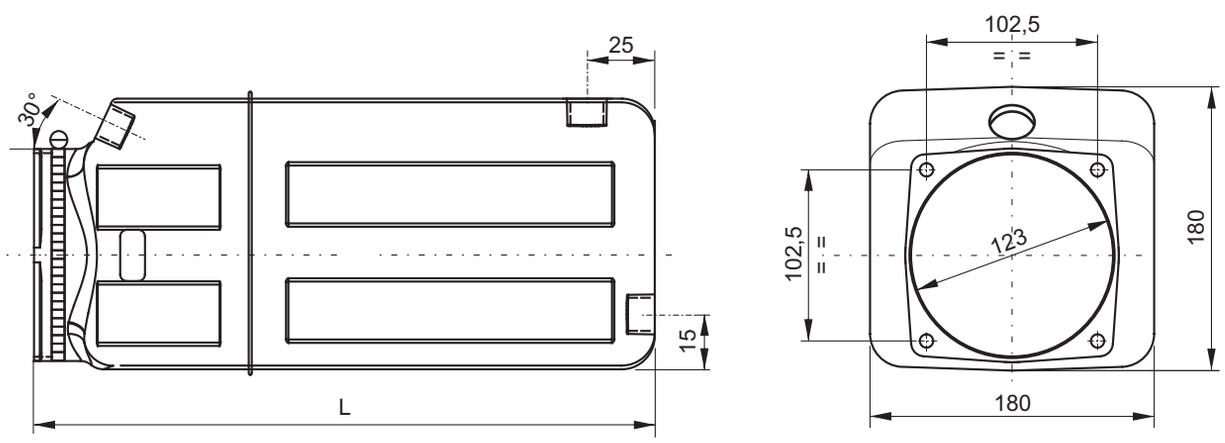

Description	PPC assembly code	Spare part code	L (mm)	Weight	Actual filling volume (lt)	
					Horizontal	Vertical
6 l squared horizontal / vertical mounting	**6N / 6NV**	**H60303026**	270	0,60 Kg	6,43	6,28
12 l squared horizontal / vertical mounting	**12N / 12NV**	**H60303036**	450	0,94 Kg	12,23	12,14

Material	PE-HD neutral / transparent color (DO NOT EXPOSE TO DIRECT SUNLIGHT)
Fluid	Mineral based oil ISO/DIN 6743/4
Working temperature	-15 / +70°C

Notes: the piping kit, standard suction strainer and filler/breather are included when specifying the tank in PPC assembly code. When ordering spare tanks, only the filler/breather C86100003, C86200002 or C86100001 and clamp band are included. Discharge ports are normally blind moulded. See accessories table U040.50.06 and .07

www.hydronit.com
E-mail: sales@hydronit.com
Fax +39 03621841214

Tanks plugs and accessories

Knurled filler breather with vane ½” BSPP

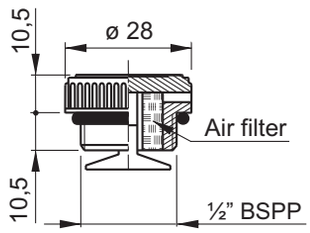

Suitable for tanks: 1,5A / 2,5A

Spare part code

C86100001E

Filler breather 1/2” - 3/4” BSPP

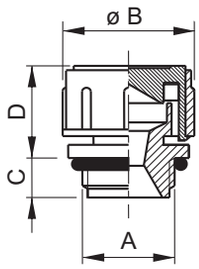

	1/2”	3/4”
A	1/2”	3/4”
ø B	30	47
C	10	17
D	21	17

Suitable for B/BV type tanks (½” BSPP)
Suitable for EV type tanks (3/4” BSPP)

Spare part codes

C86100001 (½” BSPP)
C86100002 (3/4” BSPP)

Drain plug

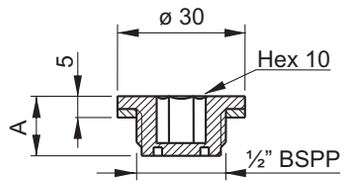

	A
TCNB0800	15
TB050801	19

Suitable for all steel tanks

Spare part codes

Code: TCNB0800 (plastic)
TB050801 (steel)

Filler breather slip-in

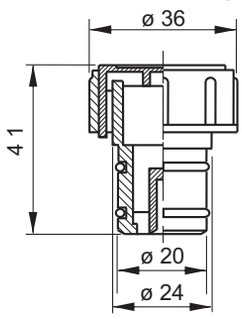

Suitable for all plastic tanks

Spare part code

C86200002

Filler breather 3/4” BSPP female

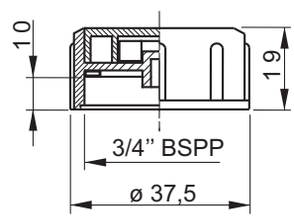

Suitable for all series plastic tanks

Spare part code

C86100003

3/4” BSPP female drain plug

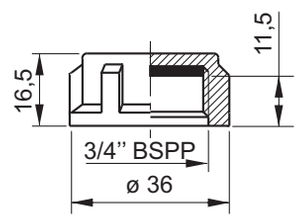

Suitable for all series plastic tanks

Spare part code

E60513005

90° elbow for suction pipe M 1/4” & 3/8” BSPT - M 3/8” BSPP

Recommended for horizontal tanks

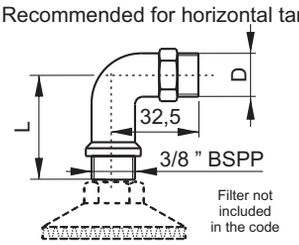

	L	D
PP01E40	40	1/4”BSPT
PP01E77	77	1/4”BSPT
PP02E40	40	3/8”BSPT
PP02E77	77	3/8”BSPT

Spare part code

PP0*E**

3/8” suction pipe

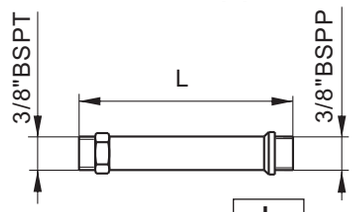

	L
PP0242	42
PP0268	68
PP02125	125
PP02142	142
PP02190	190
PP02237	237
PP02370	370

To fit inlet strainers C34100005 to the pump

Spare part codes

PP02**

1/4” return/suction pipe

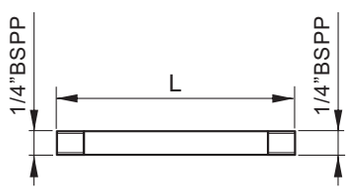

	L
PP0141	41
PP01123	123
PP01370	370

Recommended as suction pipe for PMC02 hand pumps and as return pipe with C3420001 return filter.

Spare part codes

PP01**

www.hydronit.com
E-mail: sales@hydronit.com
Fax +39 03621841214

Accessories

Inlet strainers

Screened eccentric type

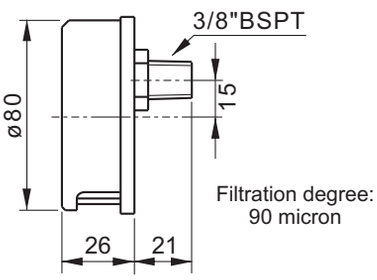

Filtration degree: 90 micron

Recommended for 1,5 l tanks horizontal mounting

Weight: 0,13 Kg

Spare part code
C34100001

Standard inlet strainer filters

Filtration degree: 90 micron

C34100005

Weight: 0,013 Kg

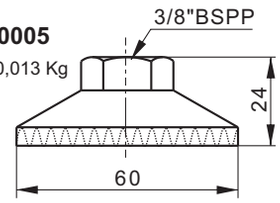

C34100004

Weight: 0,035 Kg

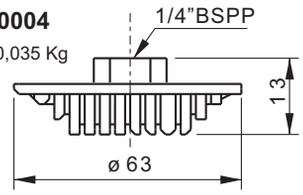

Spare part codes
C3410000*

Steel tank adapter

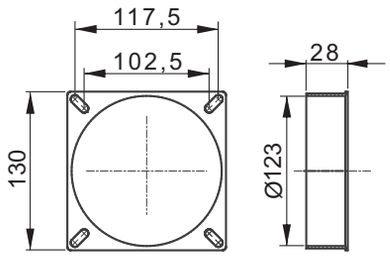

Unpainted, to be welded on custom made tanks

Weight: 0,21 Kg

Spare part code
F80000001

Return filter

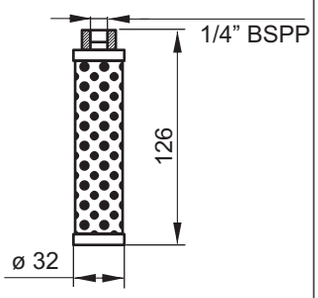

Suitable for all tanks over 3l
Weight: 0,13 Kg
Filtration degree: 90 micron

Spare part code
C34200001

Relief valve return filter

To be mounted in cavity Tr

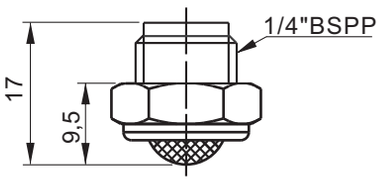

It reduces foam and noise when relief valve is laminating.

Recommended for all vertical mounting tanks.

Spare part code
SFEP14N

90° adapter for vertical tanks

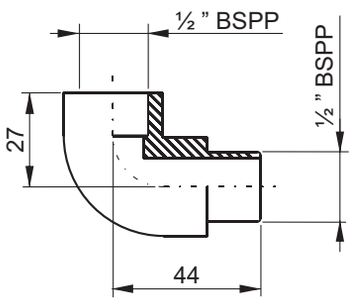

Spare part code
E60513004

Flexible plastic pipe

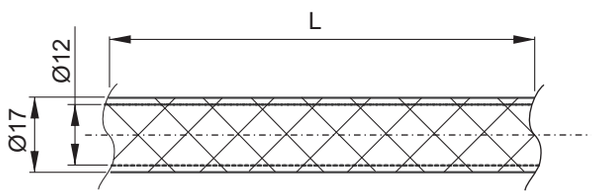

Recommended as standard return pipe.
To be fixed with TR01-12 and cut at proper lenght.
To be ordered in meters

Spare part code
SF12

Flexible plastic pipe holder for return line 1/4" BSPT

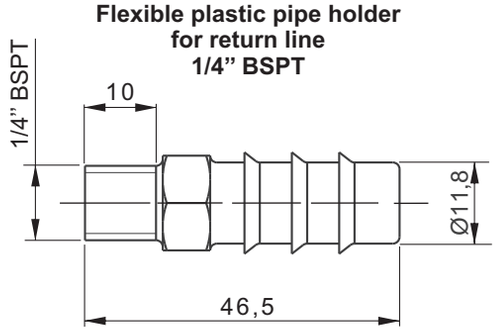

Spare part code
TR0112

Hydronit

Hydronit Srl
via Pastrengo 62
20039 Varedo - Italy
Phones: +39 0362 1841 210
+39 0232 0625 145
Fax: +39 0362 1841 214
E-mail: sales@hydronit.com
www.minipowerpacks.com
www.hydronit.com

PPC2009-03/EN